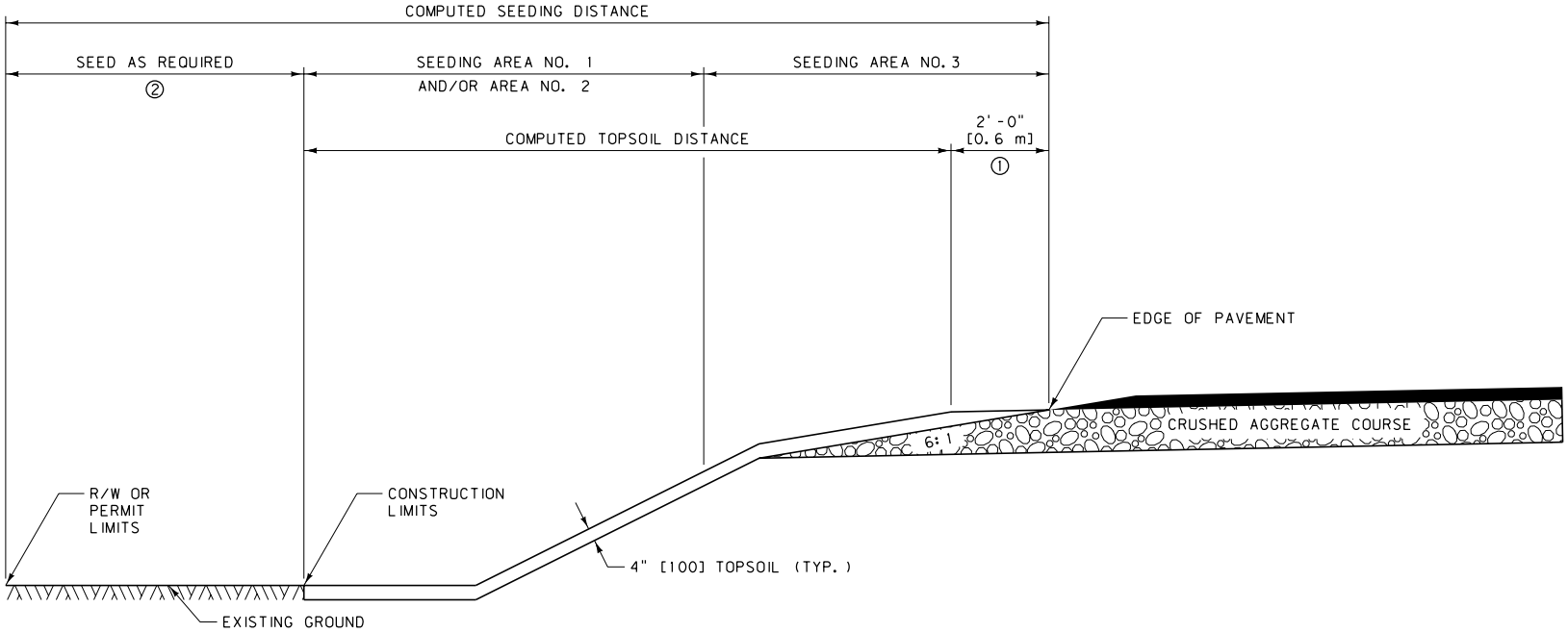

SEEDING		
AREA NO.	DEFINITION	TREATMENT
1	3:1 OR FLATTER SLOPES	CONDITION SEEDBED, SEED & FERTILIZE
2	STEEPER THAN 3:1 SLOPES	SEED, FERTILIZE & MULCH
3	15' [4.5 m] OR TO THE EDGE OF THE SURFACING INSLOPE, WHICHEVER IS GREATER	CONDITION SEEDBED & SEED

NOTES:

① PLACE TOPSOIL ON THE SURFACING INSLOPE TO A DEPTH OF 4" [100](±) NOT LESS THAN 2'-0" [0.6 m]FROM THE EDGE OF PAVEMENT. FEATHER TOPSOIL TO THE EDGE OF PAVEMENT.

② SEED AREAS BEYOND THE CONSTRUCTION LIMITS WITHIN THE RIGHT-OF-WAY OR PERMIT BOUNDARIES THAT HAVE BEEN DISTURBED (ie. STAGING AREAS, TOPSOIL PILES, EQUIPMENT TRAILS, etc.).

③ SALVAGE SUFFICIENT AMOUNTS OF TOPSOIL TO ASSURE QUANTITIES ARE AVAILABLE TO COVER ALL CLEARED AND GRUBBED AREAS WITH 4" [100]OF TOPSOIL. IF QUANTITIES ARE NOT AVAILABLE, RE-SPREAD TOPSOIL TO AN EVEN DEPTH ACROSS ALL DISTURBED GROUND.

UNITS SHOWN IN BRACKETS [] ARE METRIC AND ARE IN MILLIMETERS (mm) UNLESS OTHER UNITS ARE SHOWN.

DETAILED DRAWING

REFERENCE STANDARD SPEC. SECTION 610

DWG. NO. 610-00

TOPSOIL AND SEEDING

EFFECTIVE: SEPTEMBER 2014

MDT MONTANA DEPARTMENT OF TRANSPORTATION

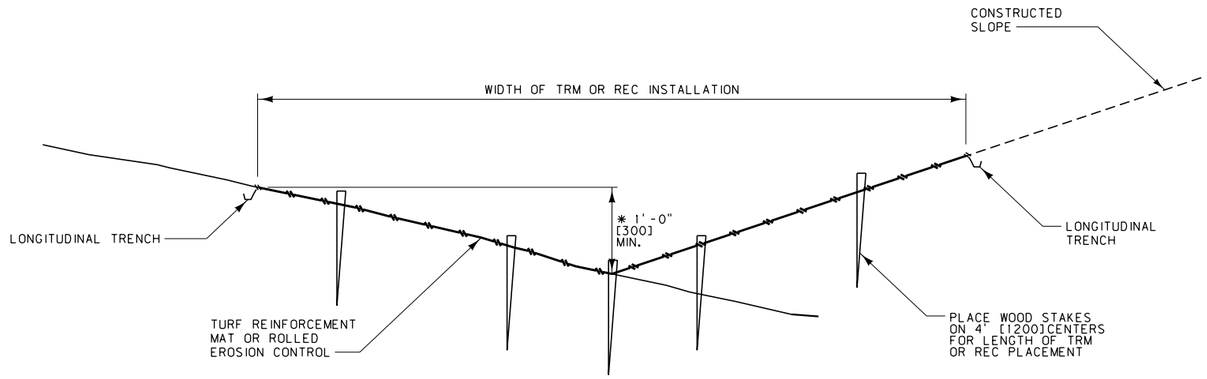

SLOPE INSTALLATION
* UNLESS OTHERWISE NOTED IN PLANS

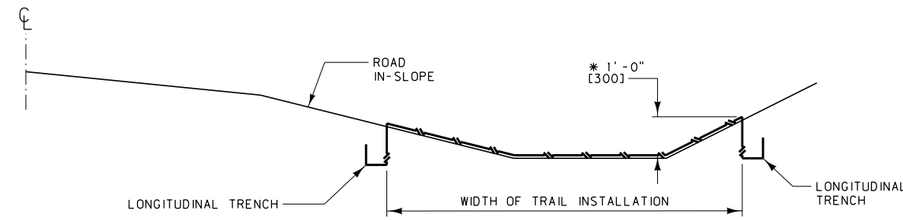

DITCH INSTALLATION
* UNLESS OTHERWISE NOTED IN PLANS

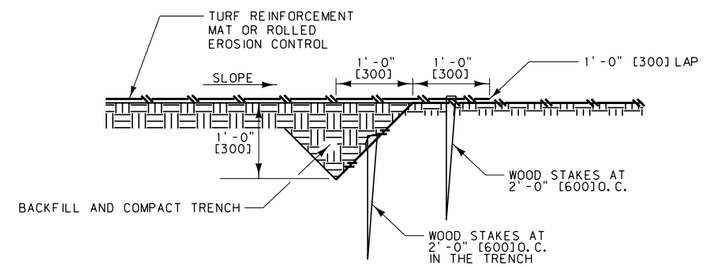

CHECK SLOT/CONSECUTIVE ROLL JOINT TRENCH

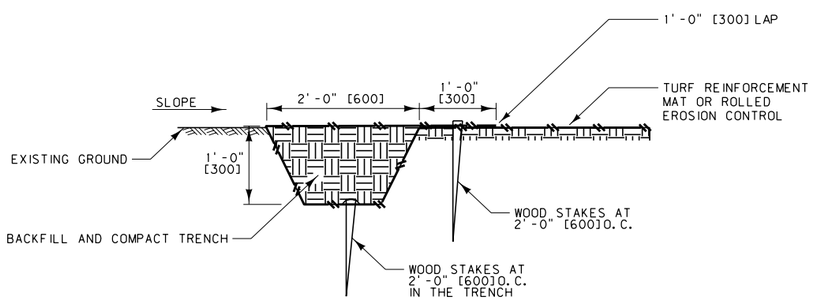

INITIAL ANCHOR TRENCH

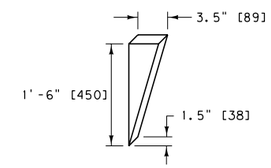

TRM WOOD STAKE

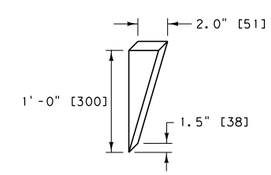

REC WOOD STAKE

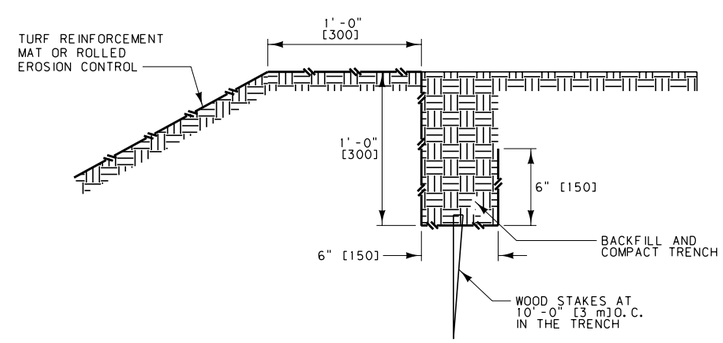

LONGITUDINAL TRENCH

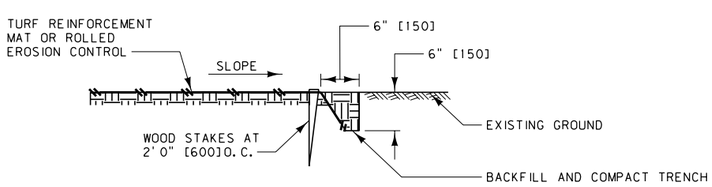

TERMINAL TRENCH

NOTES:

1. PROVIDE A SOIL SURFACE STABLE, FREE OF ROCKS, AND TO PLAN SPECIFICATIONS.
2. SEED, FERTILIZER, AND/OR APPLY OTHER SPECIFIED (IF APPLICABLE) SOIL AMENDMENTS PRIOR TO INSTALLATION. RAKE ALL SEED INTO THE UPPER 0.5" [13] OF SOIL PRIOR TO TRM OR REC PLACEMENT.
3. ONLY USE WOODEN STAKES THAT ARE OF THE SIZE AND DIMENSION SHOWN. METAL STAPLES ARE NOT ALLOWED.
4. UNROLL THE TRM OR REC PARALLEL TO THE PRIMARY DIRECTION OF FLOW AND PLACE IT IN DIRECT CONTACT WITH SOIL SURFACE. DO NOT STRETCH OR ALLOW TRM OR REC TO BRIDGE OVER SURFACE INCONSISTENCIES.
5. INITIAL ANCHOR TRENCH: PROVIDE AN INITIAL ANCHOR TRENCH AT THE BEGINING OF THE SLOPE OR DITCH INSTALLATION FOR THE PLAN WIDTH OF THE TRM OR REC.
6. TERMINAL TRENCH: PROVIDE A TERMINAL TRENCH AT THE END OF THE SLOPE OR DITCH INSTALLATION FOR THE PLAN WIDTH OF THE TRM OR REC.
7. CHECK SLOT/CONSECUTIVE ROLL JOINT TRENCH: PROVIDE A CHECK SLOT A MINIMUM OF EVERY 25' [7.6 m]. DO NOT LOCATE A CHECK SLOT AT A DITCH FLOWLINE OR WHERE A CONSTRUCED SLOPE AND IN-PLACE SLOPE MEET.

UNITS SHOWN IN BRACKETS [] ARE METRIC AND ARE IN MILLIMETERS (mm) UNLESS OTHER UNITS ARE SHOWN.

DETAILED DRAWING	
REFERENCE STANDARD SPEC. SECTION 610	DWG. NO. 610-05
TURF REINFORCEMENT MAT (TRM) AND ROLLED EROSION CONTROL (REC)	
EFFECTIVE: SEPTEMBER 2014	
MDT MONTANA DEPARTMENT OF TRANSPORTATION	