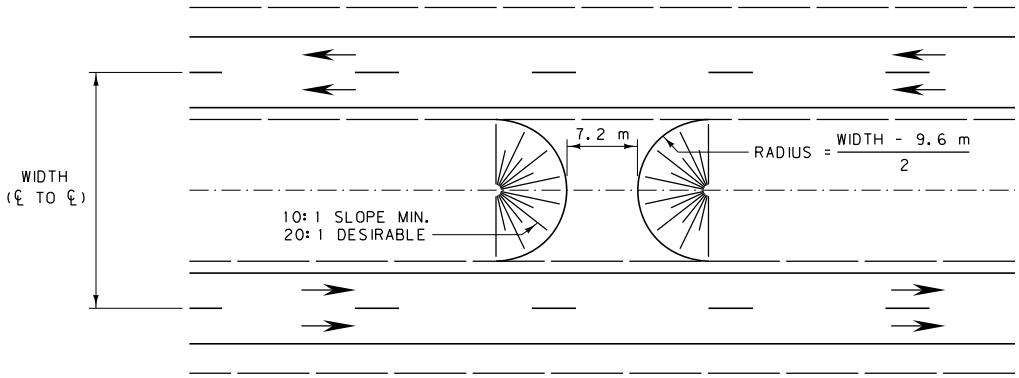

PLAN

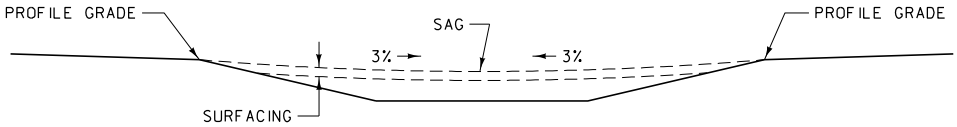

PROFILE

MEDIAN WIDTHS 10.8 m TO 22.8 m

LOCATE AND CONSTRUCT TURNOUTS ABOVE IN CONJUNCTION WITH DITCH BLOCKS IF AT ALL POSSIBLE. PROVIDE DRAINAGE WHEN NECESSARY.

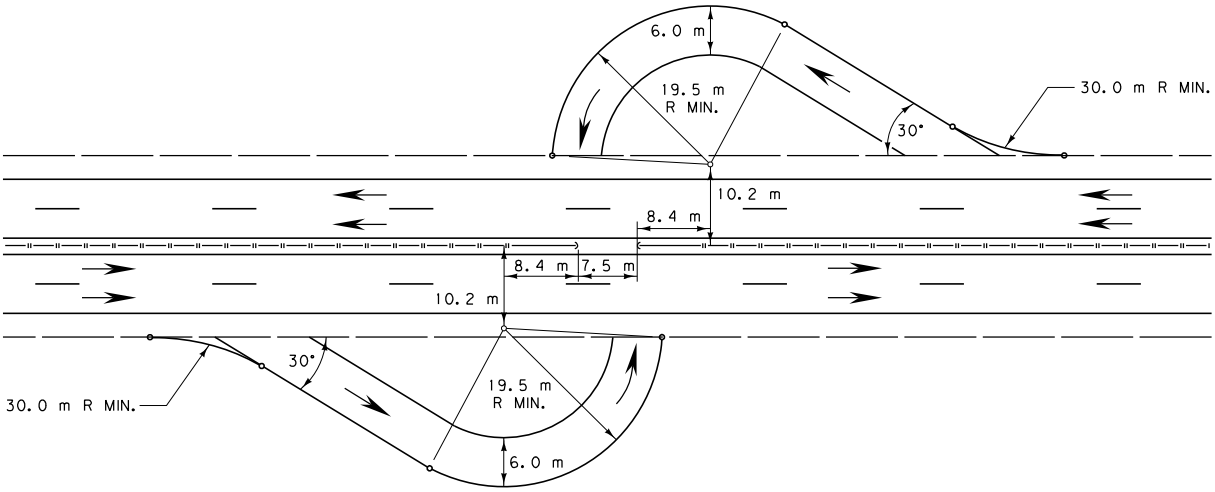

STANDARD U-TURN FOR NARROW MEDIANS

ALL DIMENSIONS ARE MILLIMETERS (mm) UNLESS OTHERWISE NOTED.

NOTES:

NARROW MEDIANS, MEDIAN WIDTHS GREATER THAN 22.8 m, AND INDEPENDENT ROADWAYS REQUIRE SPECIAL DESIGN.

GRADES: UNIFORM BETWEEN INSIDE SHOULDERS OF MAIN TRAVELED WAY EXCEPT FOR SPECIAL DESIGN.
SURFACING: SEE PLANS FOR QUANTITIES.
DRAINAGE: USE 450 mm OR 600 mm CULVERTS IF REQUIRED.

DETAILED DRAWING	
REFERENCE STANDARD SPEC. SECTION	DWG. NO. 900-00
U-TURN MEDIAN OPENINGS ON CONTROLLED ACCESS HIGHWAYS	
EFFECTIVE: FEBRUARY 2005	
serving you with pride	MONTANA DEPARTMENT OF TRANSPORTATION

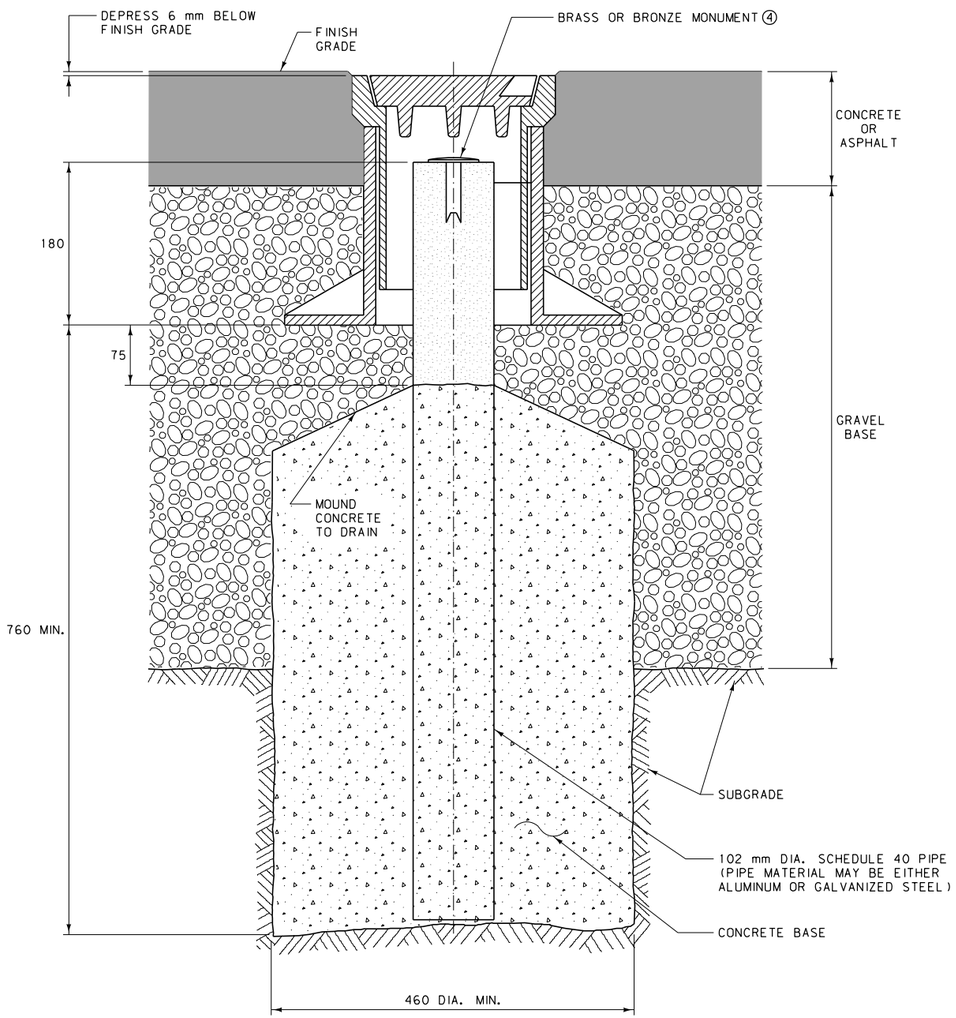

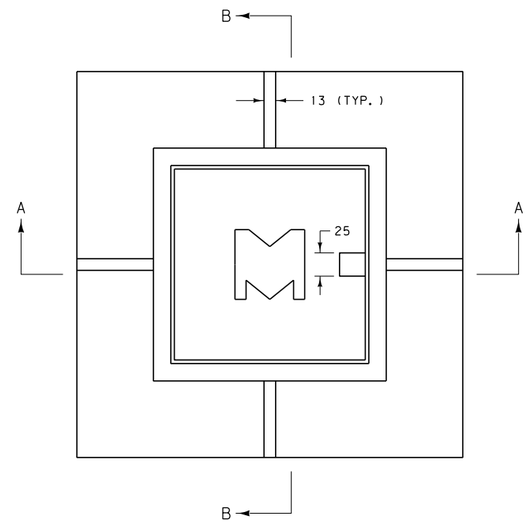

PLAN

NEENAH FOUNDRY R-1968 TYPE 36-B ADJUSTABLE MONUMENT BOX (HEAVY DUTY) OR APPROVED EQUAL

NOTES:

① INSTALL THE 102 mm DIA. PIPE, CONCRETE BASE AND ADJUSTABLE MONUMENT BOX AS DETAILED. PLACE CONCRETE IN THE PIPE UP TO 255 mm BELOW THE TOP OF THE PIPE (DO NOT FILL COMPLETELY.)

② POSITION THE CENTER OF THE PIPE TO WITHIN 13 mm HORIZONTALLY OF THE DESIRED COORDINATES AND CENTER THE MONUMENT BOX OVER THE PIPE.

③ DEPENDING ON CONTRACT REQUIREMENTS, EITHER MDT FORCES UNDER THE DIRECTION OF A MONTANA PROFESSIONAL LAND SURVEYOR OR CONTRACTOR FORCES UNDER THE DIRECTION OF A MONTANA PROFESSIONAL LAND SURVEYOR WILL BE REQUIRED TO SET AND MARK THE BRASS OR BRONZE MONUMENT WITHIN THE BOX AFTER CONSTRUCTION. THE MONTANA PROFESSIONAL LAND SURVEYOR WILL BE REQUIRED TO PREPARE AND FILE CORNER RECORDATIONS IN ACCORDANCE WITH STATE STATUTES, ADMINISTRATIVE RULES OF MONTANA AND PROVISIONS OF THE MDT SURVEY MANUAL. PROVIDE COPIES OF FILED CORNER RECORDATIONS TO THE MDT ENGINEERING PROJECT MANAGER.

④ AN ACCEPTABLE BRONZE MONUMENT IS THE "BERNTSEN C25DB" OR APPROVED EQUAL. AN ACCEPTABLE BRASS MONUMENT IS THE "SURV-KAP M/M-BCS-2½D" OR APPROVED EQUAL.

⑤ ALL CONCRETE IS CLASS DD OR APPROVED EQUAL.

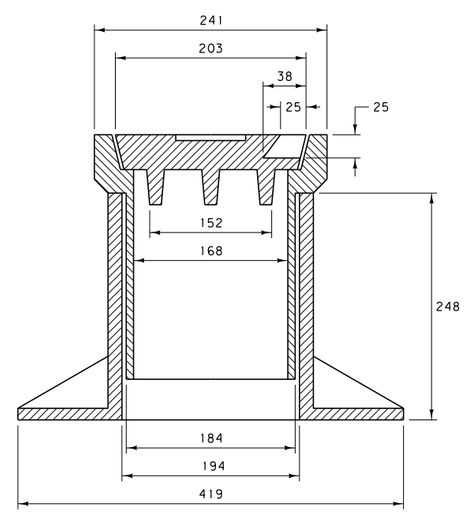

SECTION A-A

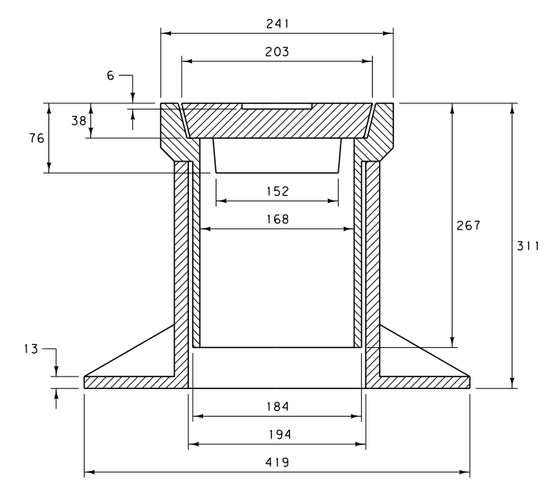

SECTION B-B

ALL DIMENSIONS ARE MILLIMETERS (mm) UNLESS OTHERWISE NOTED.

DETAILED DRAWING	
REFERENCE STANDARD SPEC. SECTION	DWG. NO. 900-15
ADJUSTABLE MONUMENT BOX	
EFFECTIVE: APRIL 2006	
serving you with pride	MONTANA DEPARTMENT OF TRANSPORTATION