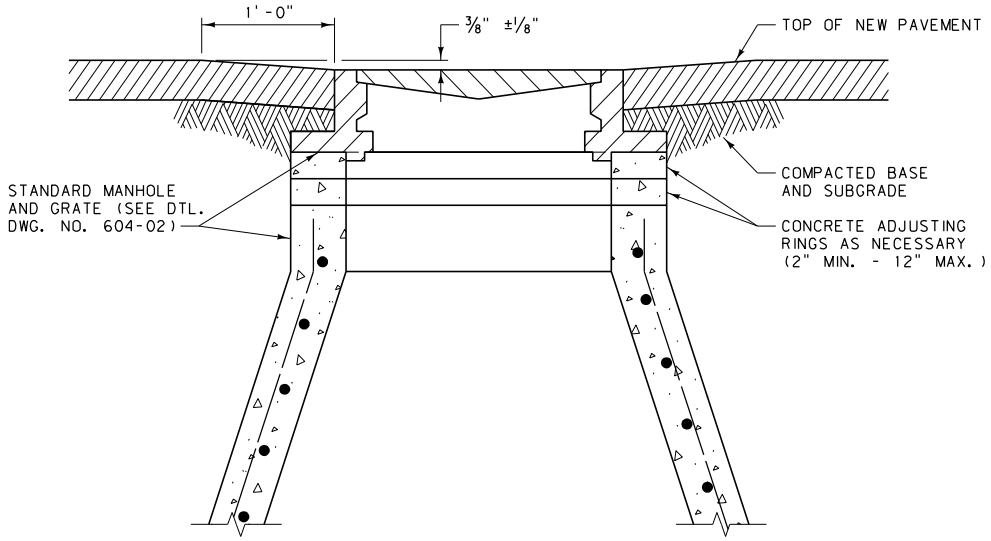

NOTES:

ADJUST MANHOLES UPWARD WITH ADJUSTING RINGS UNDER FRAME.

ADJUST MANHOLES DOWNWARD BY REMOVING CONE AND BARREL SECTIONS AS NECESSARY AND REPLACING WITH SECTIONS OF LENGTH REQUIRED TO MATCH GRADE.

SLOPE MANHOLE FRAME AS REQUIRED TO MATCH SLOPE OF STREET.

MAKE FINAL MANHOLE ADJUSTMENTS BEFORE PAVING.

MANHOLE ADJUSTMENT DETAIL

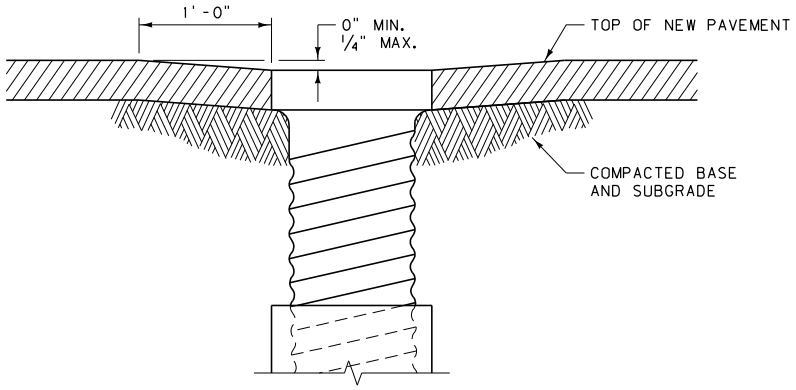

NOTES:

ADJUST WATER VALVES UPWARD OR DOWNWARD AS REQUIRED.

MAKE FINAL ADJUSTMENT BEFORE PAVING.

VALVE BOX ADJUSTMENT DETAIL

DETAILED DRAWING	
REFERENCE STANDARD SPEC. SECTION 604, 621	DWG. NO. 621-00
MANHOLE AND VALVE BOX ADJUSTMENT DETAILS	
EFFECTIVE: FEBRUARY 2005	
serving you with pride	MONTANA DEPARTMENT OF TRANSPORTATION

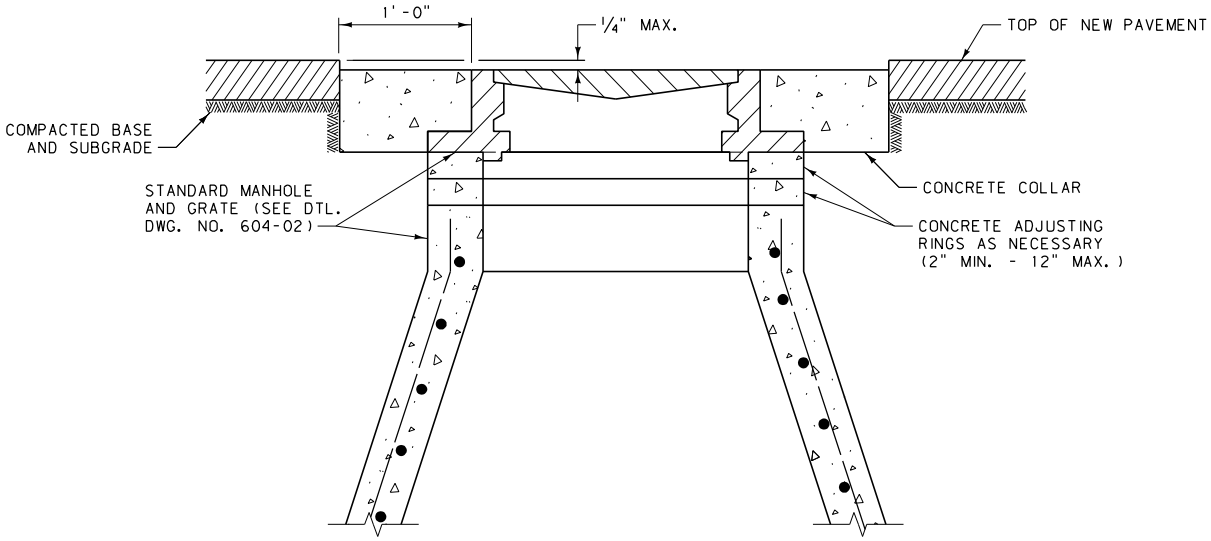

NOTES:

ADJUST MANHOLES UPWARD WITH ADJUSTING RINGS UNDER FRAME.

ADJUST MANHOLES DOWNWARD BY REMOVING CONE AND BARREL SECTIONS AS NECESSARY AND REPLACING WITH SECTIONS OF LENGTH REQUIRED TO MATCH GRADE.

SLOPE MANHOLE FRAME AS REQUIRED TO MATCH SLOPE OF STREET.

MAKE FINAL MANHOLE ADJUSTMENTS BEFORE PAVING.

MANHOLE ADJUSTMENT DETAIL

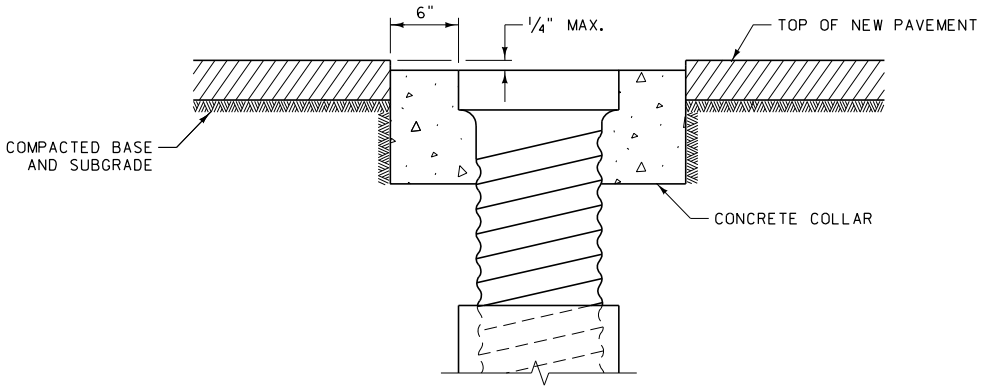

NOTES:

ADJUST WATER VALVES UPWARD OR DOWNWARD AS REQUIRED.

MAKE FINAL ADJUSTMENT BEFORE PAVING.

VALVE BOX ADJUSTMENT DETAIL

DETAILED DRAWING	
REFERENCE STANDARD SPEC. SECTION 604, 621	DWG. NO. 621-05
OPTIONAL MANHOLE AND VALVE BOX ADJUSTMENT DETAILS	
EFFECTIVE: FEBRUARY 2005	
serving you with pride	MONTANA DEPARTMENT OF TRANSPORTATION