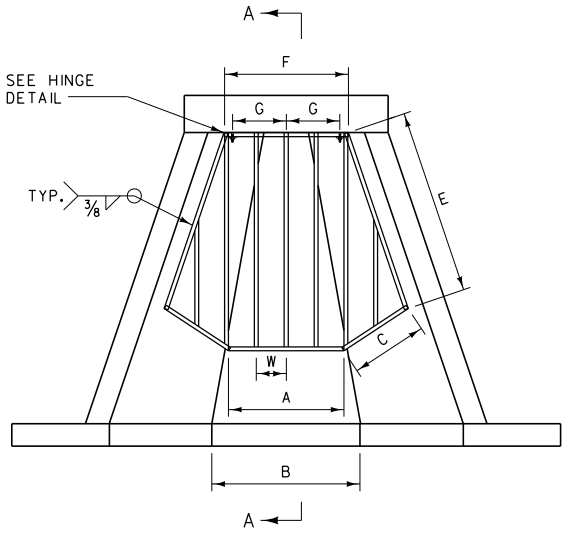

PLAN VIEW

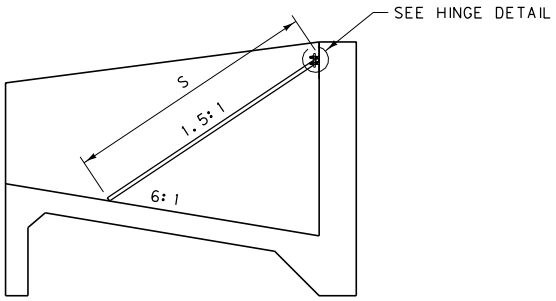

SECTION A-A

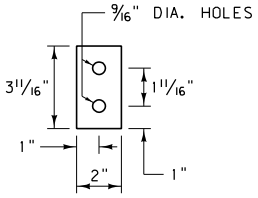

PLATE DETAIL

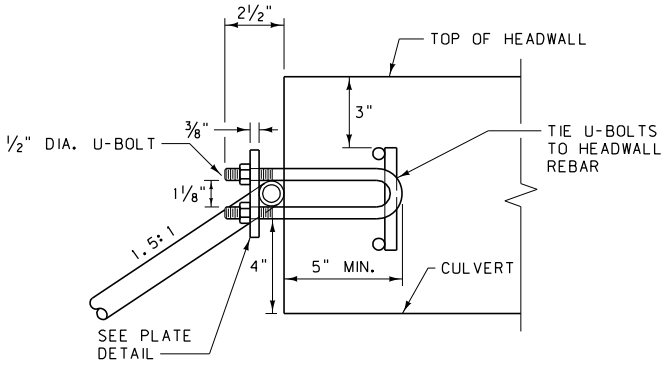

HINGE DETAIL

CSP									
CULVERT DIA. D	DIMENSIONS (FT.)								3/4" GSP *
	B	A	C	E	F	S	W	G	
18"	1.5	1.19	0.74	2.32	0.80	2.76	0.36	0.23	19.54'
18"	2.5	1.97	0.69	2.42	0.80	2.76	0.46	0.27	20.21'
18"	3.5	2.75	0.64	2.57	0.80	2.76	0.43	0.27	24.60'
24"	2.0	1.55	1.07	2.81	1.30	3.48	0.50	0.37	25.26'
24"	3.0	2.28	1.01	2.91	1.30	3.48	0.59	0.46	26.19'
24"	4.0	3.02	0.96	3.03	1.30	3.48	0.51	0.38	31.81'
30"	2.5	1.91	1.40	3.31	1.80	4.20	0.47	0.77	37.99'
30"	3.5	2.22	1.34	3.40	1.80	4.20	0.54	0.77	37.33'
30"	4.5	3.33	1.28	3.51	1.80	4.20	0.60	0.77	38.73'
36"	3.0	2.27	1.73	3.81	2.30	4.92	0.57	1.00	45.20'
36"	4.0	3.96	1.67	3.89	2.30	4.92	0.63	1.00	47.38'
36"	5.0	3.65	1.61	3.99	2.30	4.92	0.56	0.99	53.16'
42"	3.5	2.63	2.06	4.31	2.80	5.64	0.67	1.20	52.15'
42"	4.5	3.31	1.99	4.39	2.80	5.64	0.59	1.00	60.53'
42"	5.5	3.99	1.93	4.81	2.80	5.64	0.63	1.10	61.91'
48"	4.0	2.99	2.38	4.81	3.30	6.37	0.62	1.50	68.28'
48"	5.0	3.66	2.32	4.89	3.30	6.37	0.66	1.50	69.12'
48"	6.0	4.33	2.26	4.97	3.30	6.37	0.59	1.50	79.39'

NOTES:

PAINT ALL WELDS AND OTHER NON-GALVANIZED PARTS IN ACCORDANCE WITH SECTION 710 OF THE STANDARD SPECIFICATIONS.

W = CENTER TO CENTER PIPE SPACING.

TWO 1/2" DIA. U-BOLT AND PLATE ASSEMBLIES NEEDED PER TRASHGUARD.

* 3/4" DIA. SCHEDULE 80 GALV. STEEL PIPE (GSP).

RCP									
CULVERT DIA. D	DIMENSIONS (FT.)								3/4" GSP *
	B	A	C	E	F	S	W	G	
18"	1.5	1.27	0.80	2.58	0.80	3.06	0.39	0.26	21.38'
18"	2.5	2.14	0.74	2.70	0.80	3.06	0.50	0.27	22.03'
18"	3.5	3.00	0.69	2.87	0.80	3.06	0.46	0.27	27.05'
24"	2.0	1.62	1.14	3.13	1.30	3.84	0.53	0.40	27.50'
24"	3.0	2.46	1.08	3.24	1.30	3.84	0.47	0.34	33.81'
24"	4.0	3.27	1.02	3.38	1.30	3.84	0.55	0.42	34.65'
30"	2.5	2.03	1.48	3.68	1.80	4.62	0.50	0.77	40.94'
30"	3.5	2.81	1.41	3.79	1.80	4.62	0.57	0.77	41.30'
30"	4.5	3.59	1.36	3.91	1.80	4.62	0.52	0.77	48.45'
36"	3.0	2.41	1.82	4.24	2.30	5.41	0.60	1.00	48.83'
36"	4.0	3.16	1.75	4.34	2.30	5.41	0.54	0.95	57.02'
36"	5.0	3.92	1.69	4.44	2.30	5.41	0.60	1.00	57.31'
42"	3.5	2.79	2.16	4.79	2.80	6.19	0.57	1.00	64.85'
42"	4.5	3.53	2.09	4.88	2.80	6.19	0.62	1.10	65.70'
42"	5.5	4.27	2.03	4.99	2.80	6.19	0.67	1.20	66.59'
48"	4.0	3.17	2.49	5.35	3.30	6.97	0.65	1.50	73.74'
48"	5.0	3.90	2.43	5.44	3.30	6.97	0.58	1.50	85.36'
48"	6.0	4.63	2.36	5.53	3.30	6.97	0.63	1.50	85.17'

DIMENSIONS AND QUANTITIES ARE FOR ESTIMATING PURPOSES ONLY.

DETAILED DRAWING

REFERENCE STANDARD SPEC. SECTION 615

DWG. NO. 615-02

TRASHGUARD FOR CONCRETE IRRIGATION INLET AND OUTLET TRANSITION STRUCTURES

EFFECTIVE: FEBRUARY 2005

serving you with pride

MONTANA DEPARTMENT OF TRANSPORTATION

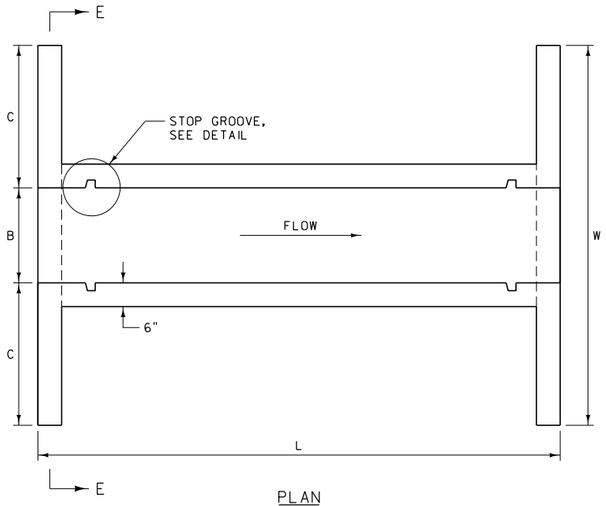

PLAN
TYPE I

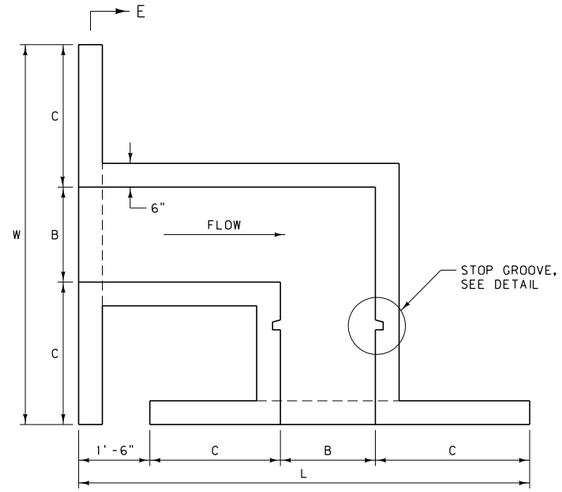

PLAN
TYPE II

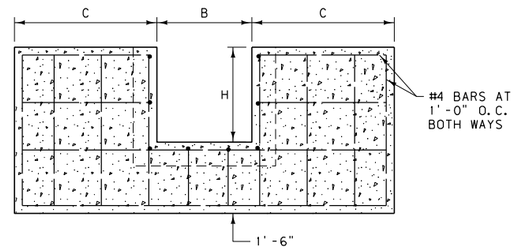

SECTION E-E

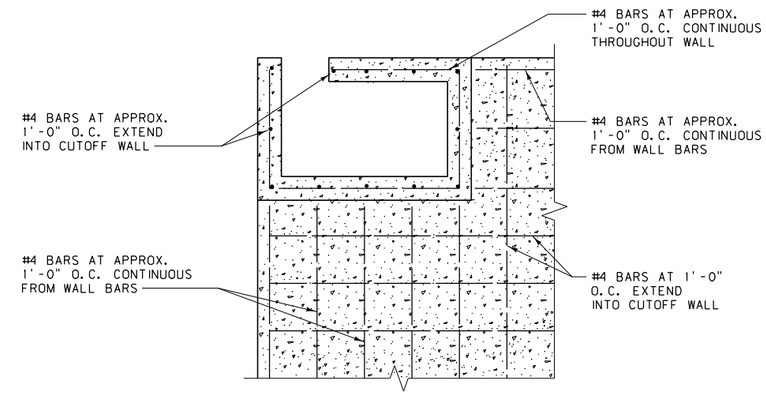

SECTION F-F

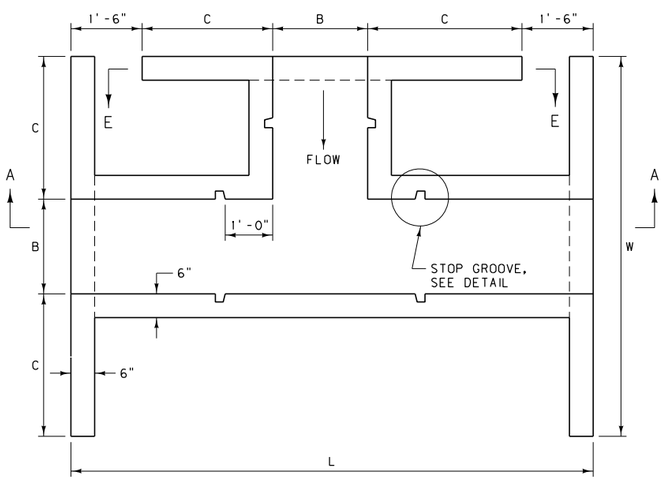

PLAN
TYPE III

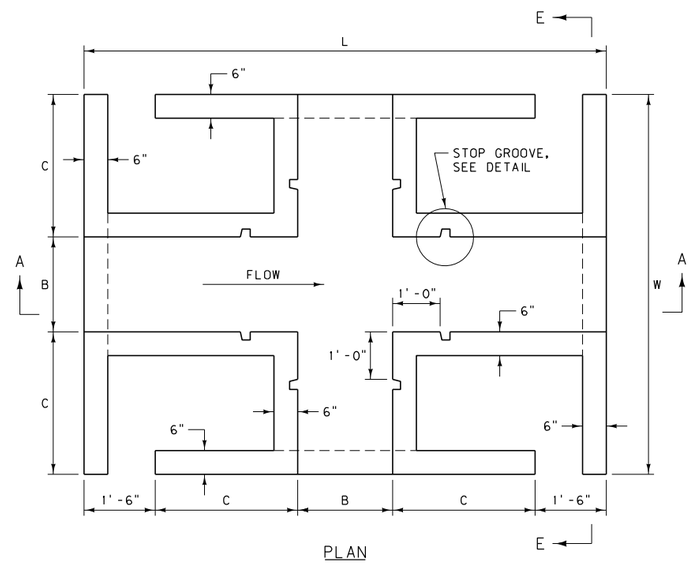

PLAN
TYPE IV

DIMENSIONS AND QUANTITIES							
	B	C	H	L	W	"DD" CONC. OR EQUAL (C.Y.)	REINFORCING STEEL (LB.)
TYPE I	2'-0"	3'-0"	2'-0"	6'-0"	8'-0"	1.5	114.0
	2'-6"	3'-6"	2'-0"	6'-0"	9'-6"	1.7	124.4
	3'-0"	4'-0"	2'-6"	6'-0"	11'-0"	2.2	129.0
TYPE II	2'-0"	3'-0"	2'-0"	9'-6"	8'-0"	2.0	152.0
	2'-6"	3'-6"	2'-0"	11'-0"	9'-6"	2.4	190.0
	3'-0"	4'-0"	2'-6"	12'-6"	11'-0"	3.3	250.8
TYPE III	2'-0"	3'-0"	2'-0"	11'-0"	8'-0"	2.8	212.8
	2'-6"	3'-6"	2'-0"	12'-6"	9'-6"	3.4	258.4
	3'-0"	4'-0"	2'-6"	14'-0"	11'-0"	4.6	349.6
TYPE IV	2'-0"	3'-0"	2'-0"	11'-0"	8'-0"	3.4	266.0
	2'-6"	3'-6"	2'-0"	12'-6"	9'-6"	4.2	319.2
	3'-0"	4'-0"	2'-6"	14'-0"	11'-0"	5.6	425.6

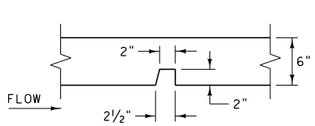

STOP GROOVE DETAIL

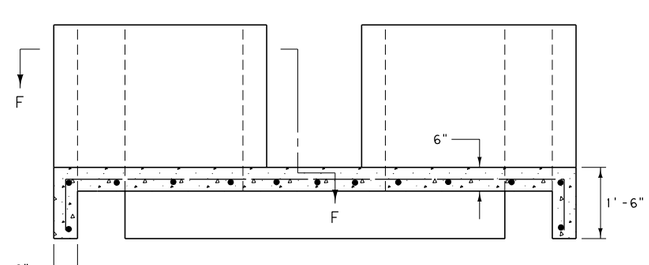

SECTION A-A

NOTES:

DIVISION BOX MAY BE MODIFIED IF DESIRED WITH DIMENSIONS SHOWN ON THE PLANS.

QUANTITIES ARE FOR ESTIMATING PURPOSES ONLY.

DETAILED DRAWING

REFERENCE
STANDARD SPEC.
SECTION 552.615

DWG. NO.
615-04

STANDARD CONCRETE
IRRIGATION DIVISION BOXES

EFFECTIVE: FEBRUARY 2005

serving you with pride

MONTANA DEPARTMENT OF TRANSPORTATION

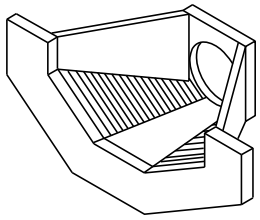

ISOMETRIC VIEW OF TRANSITION

PLACE REBAR IN CENTER OF WALLS, SLAB, ETC. UNLESS OTHERWISE SPECIFIED.

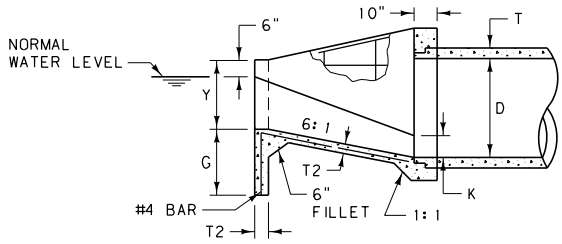

SECTION B-B

SPACE REINFORCING BARS APPROX. 12" EACH WAY THROUGHOUT STRUCTURE. USE CONTINUOUS BARS IN FLOORS AND WALLS WHENEVER POSSIBLE. WHEN SPLICES ARE MADE, LAP REINFORCING BAR 1'-6".

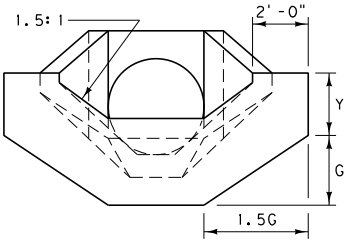

ELEVATION

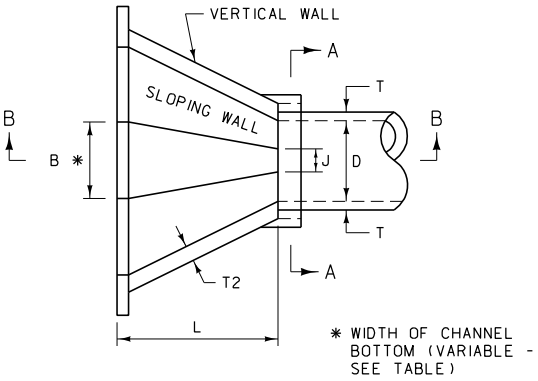

* WIDTH OF CHANNEL BOTTOM (VARIABLE - SEE TABLE)

PLAN VIEW

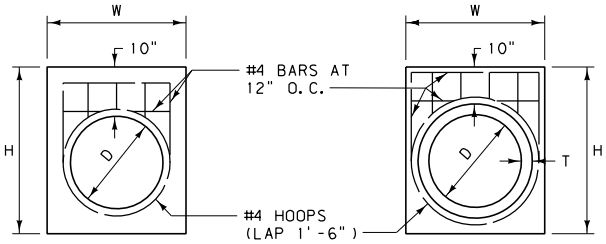

SECTION A-A
FOR CSP

SECTION A-A
FOR RCP

CHAMFER ALL EXPOSED CORNERS TO 1".

INLET AND OUTLET CONCRETE TRANSITIONS FOR CSP																		
CULVERT		DIMENSIONS								QUANTITIES								
										B = D			B = D + 1'-0"			B = D + 2'-0"		
DIA. D	AREA (SQ. FT.)	J	H	L	T2	W	K	Y	G	B	CL"DD" CONC. (C.Y.)	#4 REBAR (LB.)	B	CL"DD" CONC. (C.Y.)	#4 REBAR (LB.)	B	CL"DD" CONC. (C.Y.)	#4 REBAR (LB.)
18"	1.77	0.45'	3'-5"	3'-0"	6"	2'-9"	0.35'	1'-3"	2'-0"	1'-6"	0.8	66	2'-6"	0.9	73	3'-6"	1.0	81
24"	3.14	0.61'	4'-0"	4'-0"	6"	3'-3"	0.46'	1'-6"	2'-0"	2'-0"	1.2	94	3'-0"	1.3	103	4'-0"	1.4	112
30"	4.91	0.76'	4'-6"	5'-0"	6"	3'-9"	0.58'	1'-9"	2'-0"	2'-6"	1.6	124	3'-6"	1.7	134	4'-6"	1.8	144
36"	7.07	0.91'	5'-1"	6'-0"	6"	4'-3"	0.70'	2'-0"	2'-6"	3'-0"	2.1	162	4'-0"	2.2	173	5'-0"	2.3	184
42"	9.62	1.10'	5'-8"	7'-0"	6"	4'-9"	0.81'	2'-3"	2'-6"	3'-6"	2.6	200	4'-6"	2.7	212	5'-6"	2.9	225
48"	12.57	1.20'	6'-3"	8'-0"	8"	5'-3"	0.93'	2'-6"	2'-6"	4'-0"	4.1	245	5'-0"	4.3	259	6'-0"	4.4	272

INLET AND OUTLET CONCRETE TRANSITIONS FOR RCP																			
CULVERT		DIMENSIONS									QUANTITIES								
											B = D			B = D + 1'-0"			B = D + 2'-0"		
DIA. D	AREA (SQ. FT.)	J	H	L	T	T2	W	K	Y	G	B	CL"DD" CONC. (C.Y.)	#4 REBAR (LB.)	B	CL"DD" CONC. (C.Y.)	#4 REBAR (LB.)	B	CL"DD" CONC. (C.Y.)	#4 REBAR (LB.)
18"	1.77	0.45'	3'-8"	3'-0"	2½"	6"	3'-2"	0.35'	1'-3"	2'-0"	1'-6"	0.9	68	2'-6"	1.0	76	3'-6"	1.0	83
24"	3.14	0.61'	4'-3"	4'-0"	3"	6"	3'-9"	0.46'	1'-6"	2'-0"	2'-0"	1.2	98	3'-0"	1.3	107	4'-0"	1.4	116
30"	4.91	0.76'	4'-10"	5'-0"	3½"	6"	4'-4"	0.58'	1'-9"	2'-0"	2'-6"	1.7	128	3'-6"	1.8	138	4'-6"	1.9	149
36"	7.07	0.91'	5'-6"	6'-0"	4"	6"	4'-11"	0.70'	2'-0"	2'-6"	3'-0"	2.2	168	4'-0"	2.3	179	5'-0"	2.4	190
42"	9.62	1.10'	6'-1"	7'-0"	4½"	6"	5'-6"	0.81'	2'-3"	2'-6"	3'-6"	2.7	212	4'-6"	2.8	224	5'-6"	2.9	237
48"	12.57	1.20'	6'-8"	8'-0"	5"	8"	6'-1"	0.93'	2'-6"	2'-6"	4'-0"	4.2	254	5'-0"	4.3	267	6'-0"	4.6	287

NOTES:

INSTALL STRUCTURES OUTSIDE THE CLEAR ZONE.

PROVIDE TRASHRACKS WHEN REQUIRED. SEE DTL. DWG. NO. 615-02.

DETAILED DRAWING

REFERENCE STANDARD SPEC. SECTION 615

DWG. NO. 615-06

CONCRETE IRRIGATION INLET AND OUTLET TRANSITION FOR RCP AND CSP PIPES

--REVISED--
January 2008

EFFECTIVE: FEBRUARY 2005

serving you with pride

MONTANA DEPARTMENT OF TRANSPORTATION