THREE FORKS AIRPORT

Branch: 49A **APRON** **A-1**

Length: 360 LF **Width:** 180 LF **Area:** 63,800 SF **Last Const. :** 2000 **Family:** 9ACAM

From: ENTIRE ASPHALT APRON **To:** **Surface:** AAC

Inspections

Samples Surveyed: 5 **Total Samples:** 14 **Last Inspection Date:** 10/13/2009 **PCI: 70**

Sample # 4 **Area:** 4500 SF

Distress Description	Severity	Quantity
LONGITUDINAL/TRANSVERSE CRACKING	L	99 LF
WEATHERING/RAVELING	L	112 SF
LONGITUDINAL/TRANSVERSE CRACKING	M	6 LF
OIL SPILLAGE	N	6 SF
DEPRESSION	H	4 SF
PATCHING	L	4 SF
WEATHERING/RAVELING	M	2 SF

Sample # 5 **Area:** 4500 SF

Distress Description	Severity	Quantity
LONGITUDINAL/TRANSVERSE CRACKING	L	117 LF
WEATHERING/RAVELING	L	112 SF
OIL SPILLAGE	N	8 SF
DEPRESSION	H	4 SF
DEPRESSION	L	4 SF
PATCHING	L	4 SF

Sample # 7 **Area:** 4500 SF

Distress Description	Severity	Quantity
LONGITUDINAL/TRANSVERSE CRACKING	L	120 LF
WEATHERING/RAVELING	L	112 SF
DEPRESSION	L	60 SF
LONGITUDINAL/TRANSVERSE CRACKING	M	17 LF
WEATHERING/RAVELING	M	7 SF
DEPRESSION	H	5 SF
PATCHING	L	5 SF

Sample # 11 **Area:** 4500 SF

Distress Description	Severity	Quantity
LONGITUDINAL/TRANSVERSE CRACKING	L	122 LF
WEATHERING/RAVELING	L	115 SF
LONGITUDINAL/TRANSVERSE CRACKING	M	9 LF
OIL SPILLAGE	N	27 SF
DEPRESSION	L	16 SF
DEPRESSION	H	8 SF
PATCHING	L	8 SF

Sample # 14 **Area:** 4500 SF

Distress Description	Severity	Quantity
LONGITUDINAL/TRANSVERSE CRACKING	L	84 LF
WEATHERING/RAVELING	L	112 SF
DEPRESSION	L	27 SF
SWELLING	L	18 SF

Extrapolated Distress Quantities*

Distress Description	Severity	Quantity	Density	Deduct
DEPRESSION	H	60 SF	0.09 %	12.00
LONGITUDINAL/TRANSVERSE CRACKING	L	1537 LF	2.41 %	8.50
WEATHERING/RAVELING	L	1596 SF	2.50 %	4.56
LONGITUDINAL/TRANSVERSE CRACKING	M	91 LF	0.14 %	4.28
WEATHERING/RAVELING	M	26 SF	0.04 %	4.00
DEPRESSION	L	303 SF	0.48 %	3.10
OIL SPILLAGE	N	116 SF	0.18 %	2.40
PATCHING	L	60 SF	0.09 %	2.00
SWELLING	L	51 SF	0.08 %	1.00

* Multiple deduct values are scaled down from their algebraic sum to keep the model consistent with experimental data.

Percent of Deduct Values Based on Distress Mechanism

0.0 **% Load** 56.0 **% Climate/Durability** 44.0 **% Other**

THREE FORKS AIRPORT

Branch: 49A **APRON** **A-2**

Length: 90 LF **Width:** 60 LF **Area:** 5,400 SF **Last Const. :** 1986 **Family:** 9PCAA

From: PCC WASHING STATION **To:** **Surface:** PCC

Inspections

Samples Surveyed: 1 **Total Samples:** 1 **Last Inspection Date:** 10/13/2009 **PCI: 33**

Sample # 1 **Area:** 12 Slabs

Distress Description	Severity	Quantity
JOINT SEAL DAMAGE	M	12 Slabs
LINEAR CRACKING	L	9 Slabs
FAULTING	L	7 Slabs
JOINT SPALLING	L	2 Slabs
JOINT SPALLING	M	2 Slabs
CORNER SPALLING	L	1 Slabs
SHATTERED SLAB	L	1 Slabs
CORNER BREAK	M	1 Slabs
SHRINKAGE CRACKING	N	1 Slabs

Extrapolated Distress Quantities*

Distress Description	Severity	Quantity	Density	Deduct
FAULTING	L	7 Slabs	58.33 %	29.58
LINEAR CRACKING	L	9 Slabs	75.00 %	22.00
SHATTERED SLAB	L	1 Slabs	8.33 %	15.72
CORNER BREAK	M	1 Slabs	8.33 %	12.97
JOINT SPALLING	M	2 Slabs	16.67 %	11.95
JOINT SEAL DAMAGE	M	12 Slabs	100.00 %	7.00
JOINT SPALLING	L	2 Slabs	16.67 %	5.20
CORNER SPALLING	L	1 Slabs	8.33 %	3.10
SHRINKAGE CRACKING	N	1 Slabs	8.33 %	1.40

* Multiple deduct values are scaled down from their algebraic sum to keep the model consistent with experimental data.

Percent of Deduct Values Based on Distress Mechanism

47.0 **% Load** 6.0 **% Climate/Durability** 47.0 **% Other**

THREE FORKS AIRPORT

Branch: 49R **RUNWAY** **R-1**

Length: 4,100 LF **Width:** 60 LF **Area:** 246,000 SF **Last Const. :** 2000 **Family:** 9ACRMU
From: RWY 20-2 STA 0+00 **To:** RWY 20-2 STA 41+00 **Surface:** AAC

Inspections

Samples Surveyed: 7 **Total Samples:** 51 **Last Inspection Date:** 10/13/2009 **PCI: 70**

Sample # 4 **Area:** 4800 SF

Distress Description	Severity	Quantity
LONGITUDINAL/TRANSVERSE CRACKING	L	218 LF
LONGITUDINAL/TRANSVERSE CRACKING	M	38 LF
WEATHERING/RAVELING	L	120 SF
WEATHERING/RAVELING	M	12 SF
ALLIGATOR CRACKING	L	8 SF

Sample # 11 **Area:** 4800 SF

Distress Description	Severity	Quantity
LONGITUDINAL/TRANSVERSE CRACKING	L	135 LF
LONGITUDINAL/TRANSVERSE CRACKING	M	51 LF
WEATHERING/RAVELING	L	120 SF
WEATHERING/RAVELING	M	13 SF

Sample # 18 **Area:** 4800 SF

Distress Description	Severity	Quantity
LONGITUDINAL/TRANSVERSE CRACKING	L	281 LF
LONGITUDINAL/TRANSVERSE CRACKING	M	50 LF
WEATHERING/RAVELING	L	120 SF
DEPRESSION	L	40 SF
WEATHERING/RAVELING	M	17 SF

Sample # 25 **Area:** 4800 SF

Distress Description	Severity	Quantity
LONGITUDINAL/TRANSVERSE CRACKING	L	286 LF
LONGITUDINAL/TRANSVERSE CRACKING	M	64 LF
WEATHERING/RAVELING	L	120 SF
WEATHERING/RAVELING	M	12 SF

Sample # 32 **Area:** 4800 SF

Distress Description	Severity	Quantity
LONGITUDINAL/TRANSVERSE CRACKING	L	265 LF
LONGITUDINAL/TRANSVERSE CRACKING	M	41 LF
WEATHERING/RAVELING	L	120 SF
WEATHERING/RAVELING	M	12 SF

Sample # 39 **Area:** 4800 SF

Distress Description	Severity	Quantity
LONGITUDINAL/TRANSVERSE CRACKING	L	143 LF
WEATHERING/RAVELING	L	120 SF
LONGITUDINAL/TRANSVERSE CRACKING	M	7 LF
WEATHERING/RAVELING	M	12 SF

Sample # 46 **Area:** 4800 SF

Distress Description	Severity	Quantity
LONGITUDINAL/TRANSVERSE CRACKING	L	190 LF
LONGITUDINAL/TRANSVERSE CRACKING	M	45 LF
WEATHERING/RAVELING	L	120 SF
WEATHERING/RAVELING	M	13 SF
DEPRESSION	L	8 SF

Extrapolated Distress Quantities*

Distress Description	Severity	Quantity	Density	Deduct
LONGITUDINAL/TRANSVERSE CRACKING	L	11117 LF	4.52 %	13.71
LONGITUDINAL/TRANSVERSE CRACKING	M	2168 LF	0.88 %	10.62
ALLIGATOR CRACKING	L	59 SF	0.02 %	7.00
WEATHERING/RAVELING	M	666 SF	0.27 %	5.07
WEATHERING/RAVELING	L	6150 SF	2.50 %	4.56
DEPRESSION	L	351 SF	0.14 %	0.40

* Multiple deduct values are scaled down from their algebraic sum to keep the model consistent with experimental data.

Percent of Deduct Values Based on Distress Mechanism

17.0 **% Load** 82.0 **% Climate/Durability** 1.0 **% Other**

THREE FORKS AIRPORT

Branch: 49R **RUNWAY** **R-2**

Length: 1,000 LF **Width:** 60 LF **Area:** 60,000 SF **Last Const. :** 2000 **Family:** 9ACRMU

From: RWY 20-2 STA 41+00 **To:** RWY 20-2 STA51+00 **Surface:** AAC

Inspections

Samples Surveyed: 5 **Total Samples:** 12 **Last Inspection Date:** 10/13/2009 **PCI: 80**

Sample # 2 **Area:** 4800 SF

Distress Description	Severity	Quantity
LONGITUDINAL/TRANSVERSE CRACKING	L	173 LF
WEATHERING/RAVELING	L	120 SF
WEATHERING/RAVELING	M	12 SF

Sample # 3 **Area:** 4800 SF

Distress Description	Severity	Quantity
LONGITUDINAL/TRANSVERSE CRACKING	L	86 LF
WEATHERING/RAVELING	L	120 SF
WEATHERING/RAVELING	M	12 SF

Sample # 5 **Area:** 4800 SF

Distress Description	Severity	Quantity
LONGITUDINAL/TRANSVERSE CRACKING	L	135 LF
WEATHERING/RAVELING	L	120 SF
WEATHERING/RAVELING	M	12 SF

Sample # 7 **Area:** 4800 SF

Distress Description	Severity	Quantity
LONGITUDINAL/TRANSVERSE CRACKING	L	127 LF
WEATHERING/RAVELING	L	120 SF
ALLIGATOR CRACKING	L	24 SF
WEATHERING/RAVELING	M	12 SF
DEPRESSION	L	5 SF

Sample # 11 **Area:** 4800 SF

Distress Description	Severity	Quantity
LONGITUDINAL/TRANSVERSE CRACKING	L	88 LF
WEATHERING/RAVELING	L	120 SF
WEATHERING/RAVELING	M	18 SF

Extrapolated Distress Quantities*

Distress Description	Severity	Quantity	Density	Deduct
LONGITUDINAL/TRANSVERSE CRACKING	L	1523 LF	2.54 %	8.84
ALLIGATOR CRACKING	L	60 SF	0.10 %	7.00
WEATHERING/RAVELING	M	165 SF	0.28 %	5.09
WEATHERING/RAVELING	L	1500 SF	2.50 %	4.56
DEPRESSION	L	12 SF	0.02 %	0.30

* Multiple deduct values are scaled down from their algebraic sum to keep the model consistent with experimental data.

Percent of Deduct Values Based on Distress Mechanism

27.0 **% Load** 72.0 **% Climate/Durability** 1.0 **% Other**

THREE FORKS AIRPORT

Branch: 49T **TAXIWAY** **T-1**

Length: 0 LF **Width:** 0 LF **Area:** 12,975 SF **Last Const. :** 2000 **Family:** 9ACRMU

From: RWY 20-2 **To:** APRON, WASH STA., RUNUP **Surface:** AAC

Inspections

Samples Surveyed: 3 **Total Samples:** 4 **Last Inspection Date:** 10/13/2009 **PCI: 63**

Sample # 1 **Area:** 2750 SF

Distress Description	Severity	Quantity
LONGITUDINAL/TRANSVERSE CRACKING	L	230 LF
WEATHERING/RAVELING	L	138 SF
ALLIGATOR CRACKING	L	40 SF
WEATHERING/RAVELING	M	25 SF
DEPRESSION	L	4 SF
PATCHING	M	2 SF

Sample # 2 **Area:** 2750 SF

Distress Description	Severity	Quantity
LONGITUDINAL/TRANSVERSE CRACKING	L	164 LF
WEATHERING/RAVELING	L	138 SF
LONGITUDINAL/TRANSVERSE CRACKING	H	18 LF
ALLIGATOR CRACKING	L	36 SF
DEPRESSION	L	14 SF

Sample # 4 **Area:** 3675 SF

Distress Description	Severity	Quantity
LONGITUDINAL/TRANSVERSE CRACKING	L	122 LF
WEATHERING/RAVELING	L	138 SF
LONGITUDINAL/TRANSVERSE CRACKING	M	41 LF
ALLIGATOR CRACKING	L	6 SF
OIL SPILLAGE	N	2 SF

Extrapolated Distress Quantities*

Distress Description	Severity	Quantity	Density	Deduct
ALLIGATOR CRACKING	L	116 SF	0.89 %	19.45
LONGITUDINAL/TRANSVERSE CRACKING	L	730 LF	5.63 %	16.07
LONGITUDINAL/TRANSVERSE CRACKING	H	25 LF	0.20 %	10.14
LONGITUDINAL/TRANSVERSE CRACKING	M	58 LF	0.45 %	7.88
WEATHERING/RAVELING	L	585 SF	4.51 %	6.42
PATCHING	M	3 SF	0.02 %	6.20
WEATHERING/RAVELING	M	35 SF	0.27 %	5.07
OIL SPILLAGE	N	3 SF	0.02 %	2.00
DEPRESSION	L	25 SF	0.20 %	0.75

* Multiple deduct values are scaled down from their algebraic sum to keep the model consistent with experimental data.

Percent of Deduct Values Based on Distress Mechanism

26.0 **% Load** 70.0 **% Climate/Durability** 4.0 **% Other**

THREE FORKS AIRPORT

Branch: 49T **TAXIWAY** **T-2**

Length: 0 LF **Width:** 0 LF **Area:** 74,150 SF **Last Const. :** 2000 **Family:** 9ACRMU
From: PARALLEL TO RWY 20-2 **To:** **Surface:** AAC

Inspections

Samples Surveyed: 5 **Total Samples:** 16 **Last Inspection Date:** 10/13/2009 **PCI: 79**

Sample # 2 **Area:** 5625 SF

Distress Description	Severity	Quantity
LONGITUDINAL/TRANSVERSE CRACKING	L	110 LF
WEATHERING/RAVELING	L	150 SF
ALLIGATOR CRACKING	L	70 SF
LONGITUDINAL/TRANSVERSE CRACKING	M	5 LF
WEATHERING/RAVELING	M	8 SF
SWELLING	L	1 SF

Sample # 5 **Area:** 5000 SF

Distress Description	Severity	Quantity
LONGITUDINAL/TRANSVERSE CRACKING	L	51 LF
WEATHERING/RAVELING	L	150 SF
OIL SPILLAGE	N	2 SF

Sample # 8 **Area:** 5000 SF

Distress Description	Severity	Quantity
WEATHERING/RAVELING	L	150 SF
LONGITUDINAL/TRANSVERSE CRACKING	L	22 LF
LONGITUDINAL/TRANSVERSE CRACKING	M	4 LF

Sample # 11 **Area:** 5000 SF

Distress Description	Severity	Quantity
LONGITUDINAL/TRANSVERSE CRACKING	L	111 LF
WEATHERING/RAVELING	L	150 SF
LONGITUDINAL/TRANSVERSE CRACKING	M	36 LF
WEATHERING/RAVELING	M	4 SF

Sample # 14 **Area:** 5000 SF

Distress Description	Severity	Quantity
LONGITUDINAL/TRANSVERSE CRACKING	L	55 LF
WEATHERING/RAVELING	L	150 SF

Extrapolated Distress Quantities*

Distress Description	Severity	Quantity	Density	Deduct
ALLIGATOR CRACKING	L	203 SF	0.27 %	10.22
LONGITUDINAL/TRANSVERSE CRACKING	L	1010 LF	1.36 %	5.77
WEATHERING/RAVELING	L	2170 SF	2.93 %	5.01
LONGITUDINAL/TRANSVERSE CRACKING	M	130 LF	0.18 %	4.77
WEATHERING/RAVELING	M	35 SF	0.05 %	4.00
OIL SPILLAGE	N	6 SF	0.01 %	2.00
SWELLING	L	3 SF	0.00 %	1.00

* Multiple deduct values are scaled down from their algebraic sum to keep the model consistent with experimental data.

Percent of Deduct Values Based on Distress Mechanism

31.0 **% Load** 60.0 **% Climate/Durability** 9.0 **% Other**

THREE FORKS AIRPORT

Branch: 49T **TAXIWAY** **T-3**

Length: 370 LF **Width:** 90 LF **Area:** 33,300 SF **Last Const. :** 2000 **Family:** 9ACRMU

From: A-1 **To:** T-2 **Surface:** AAC

Inspections

Samples Surveyed: 4 **Total Samples:** 8 **Last Inspection Date:** 10/13/2009 **PCI: 65**

Sample # 1 **Area:** 5400 SF

Distress Description	Severity	Quantity
LONGITUDINAL/TRANSVERSE CRACKING	L	209 LF
WEATHERING/RAVELING	L	130 SF
SWELLING	L	60 SF
LONGITUDINAL/TRANSVERSE CRACKING	M	10 LF
WEATHERING/RAVELING	M	15 SF
DEPRESSION	L	15 SF
OIL SPILLAGE	N	2 SF

Sample # 3 **Area:** 5700 SF

Distress Description	Severity	Quantity
LONGITUDINAL/TRANSVERSE CRACKING	L	156 LF
WEATHERING/RAVELING	L	142 SF
PATCHING	L	100 SF
SWELLING	L	32 SF
DEPRESSION	L	25 SF
LONGITUDINAL/TRANSVERSE CRACKING	M	7 LF
OIL SPILLAGE	N	13 SF
WEATHERING/RAVELING	M	11 SF

Sample # 7 **Area:** 4950 SF

Distress Description	Severity	Quantity
LONGITUDINAL/TRANSVERSE CRACKING	L	181 LF
DEPRESSION	L	140 SF
WEATHERING/RAVELING	L	130 SF
PATCHING	M	126 SF
LONGITUDINAL/TRANSVERSE CRACKING	M	17 LF
OIL SPILLAGE	N	10 SF
WEATHERING/RAVELING	M	8 SF

Sample # 8 **Area:** 4950 SF

Distress Description	Severity	Quantity
LONGITUDINAL/TRANSVERSE CRACKING	L	223 LF
WEATHERING/RAVELING	L	123 SF
DEPRESSION	L	84 SF
LONGITUDINAL/TRANSVERSE CRACKING	M	10 LF
OIL SPILLAGE	N	27 SF

Extrapolated Distress Quantities*

Distress Description	Severity	Quantity	Density	Deduct
LONGITUDINAL/TRANSVERSE CRACKING	L	1220 LF	3.66 %	11.71
PATCHING	M	200 SF	0.60 %	8.27
DEPRESSION	L	419 SF	1.26 %	8.03
LONGITUDINAL/TRANSVERSE CRACKING	M	70 LF	0.21 %	5.29
WEATHERING/RAVELING	L	833 SF	2.50 %	4.56
WEATHERING/RAVELING	M	54 SF	0.16 %	4.42
OIL SPILLAGE	N	82 SF	0.25 %	2.70
PATCHING	L	159 SF	0.48 %	2.42
SWELLING	L	146 SF	0.44 %	1.80

* Multiple deduct values are scaled down from their algebraic sum to keep the model consistent with experimental data.

Percent of Deduct Values Based on Distress Mechanism

0.0 **% Load** 75.0 **% Climate/Durability** 25.0 **% Other**

THREE FORKS AIRPORT

Branch: 49T **TAXIWAY** **T-4**

Length: 1,918 LF **Width:** 37 LF **Area:** 70,344 SF **Last Const. :** 2000 **Family:** 9ACRMU
From: T-2 **To:** T-3 **Surface:** AC

Inspections

Samples Surveyed: 5 **Total Samples:** 16 **Last Inspection Date:** 10/13/2009 **PCI: 78**

Sample # 2 **Area:** 5000 SF

Distress Description	Severity	Quantity
WEATHERING/RAVELING	L	125 SF
WEATHERING/RAVELING	M	1 SF
OIL SPILLAGE	N	1 SF

Sample # 4 **Area:** 4657 SF

Distress Description	Severity	Quantity
WEATHERING/RAVELING	L	125 SF
DEPRESSION	L	64 SF
OIL SPILLAGE	N	5 SF
WEATHERING/RAVELING	M	4 SF
PATCHING	L	2 SF

Sample # 6 **Area:** 4658 SF

Distress Description	Severity	Quantity
LONGITUDINAL/TRANSVERSE CRACKING	L	164 LF
WEATHERING/RAVELING	L	125 SF
DEPRESSION	L	4 SF
PATCHING	L	2 SF
WEATHERING/RAVELING	M	1 SF

Sample # 8 **Area:** 5037 SF

Distress Description	Severity	Quantity
LONGITUDINAL/TRANSVERSE CRACKING	L	33 LF
WEATHERING/RAVELING	L	108 SF
ALLIGATOR CRACKING	L	10 SF
WEATHERING/RAVELING	M	2 SF
PATCHING	L	2 SF
SWELLING	L	1 SF

Sample # 10 **Area:** 5037 SF

Distress Description	Severity	Quantity
LONGITUDINAL/TRANSVERSE CRACKING	L	244 LF
WEATHERING/RAVELING	L	122 SF
LONGITUDINAL/TRANSVERSE CRACKING	M	9 LF
DEPRESSION	L	16 SF
OIL SPILLAGE	N	9 SF
PATCHING	L	2 SF

Extrapolated Distress Quantities*

Distress Description	Severity	Quantity	Density	Deduct
ALLIGATOR CRACKING	L	29 SF	0.04 %	7.00
LONGITUDINAL/TRANSVERSE CRACKING	L	1272 LF	1.81 %	6.90
WEATHERING/RAVELING	L	1745 SF	2.48 %	4.54
WEATHERING/RAVELING	M	23 SF	0.03 %	4.00
LONGITUDINAL/TRANSVERSE CRACKING	M	26 LF	0.04 %	4.00
DEPRESSION	L	242 SF	0.34 %	2.01
OIL SPILLAGE	N	43 SF	0.06 %	2.00
PATCHING	L	23 SF	0.03 %	2.00
SWELLING	L	3 SF	0.00 %	1.00

* Multiple deduct values are scaled down from their algebraic sum to keep the model consistent with experimental data.

Percent of Deduct Values Based on Distress Mechanism

21.0 **% Load** 64.0 **% Climate/Durability** 15.0 **% Other**

THREE FORKS AIRPORT

FIRST YEAR LOCAL:2010 LOCAL REPAIR COST: $23,403

Section	Distress Description	Severity	Quantity	Work Description	Quantity	Cost	Policy
A-1	L & T CR	M	91 LF	Crack Sealing - AC	91 LF	$136	PREV.
A-1	OIL SPILLAGE	N	117 SF	Patching - AC Shallow	164 SF	$2,455	PREV.
A-1	DEPRESSION	H	60 SF	Patching - AC Deep	95 SF	$3,500	PREV.
R-1	L & T CR	M	2168 LF	Crack Sealing - AC	2168 LF	$3,252	PREV.
T-1	L & T CR	H	26 LF	Crack Sealing - AC	26 LF	$38	PREV.
T-1	L & T CR	M	58 LF	Crack Sealing - AC	58 LF	$87	PREV.
T-1	OIL SPILLAGE	N	3 SF	Patching - AC Shallow	14 SF	$204	PREV.
T-1	PATCHING	M	3 SF	Patching - AC Deep	14 SF	$503	PREV.
T-2	L & T CR	M	131 LF	Crack Sealing - AC	131 LF	$195	PREV.
T-2	OIL SPILLAGE	N	6 SF	Patching - AC Shallow	20 SF	$292	PREV.
T-3	L & T CR	M	70 LF	Crack Sealing - AC	70 LF	$105	PREV.
T-3	OIL SPILLAGE	N	83 SF	Patching - AC Shallow	123 SF	$1,845	PREV.
T-3	PATCHING	M	200 SF	Patching - AC Deep	261 SF	$9,646	PREV.
T-4	L & T CR	M	26 LF	Crack Sealing - AC	26 LF	$39	PREV.
T-4	OIL SPILLAGE	N	44 SF	Patching - AC Shallow	74 SF	$1,106	PREV.

FIFTEEN YEAR PROJECTIONS: ESTIMATED AVERAGE ANNUAL COST: $141,236

PLAN YEAR: 2010 ESTIMATED COST: $935,115

SectionI	Maintenance	Local	Global	Major<Crit	Major>Crit	Total	PCI before	PCI after
A-1	Prev. & Thin AC	$6,091	$102,080			$108,172	69	85
A-2	Reconstruct			$15,464		$15,464	32	100
R-1	Prev. & Thin AC	$3,252	$393,601			$396,853	69	81
R-2	Prev. & Thin AC		$96,000			$96,000	79	92
T-1	Local Repair				$20,928	$20,928	62	100
T-2	Prev. & Thin AC	$487	$118,640			$119,128	78	90
T-3	Prev. & Thin AC	$11,595	$53,280			$64,875	64	77
T-4	Prev. & Thin AC	$1,145	$112,551			$113,696	77	89

PLAN YEAR: 2011 ESTIMATED COST: $7,205

SectionI	Maintenance	Local	Global	Major<Crit	Major>Crit	Total	PCI before	PCI after
A-1	Basic Prev.	$896				$896	81	81
R-1	Basic Prev.	$4,532				$4,532	79	79
R-2	Basic Prev.	$115				$115	89	89
T-2	Basic Prev.	$285				$285	88	88
T-3	Basic Prev.	$980				$980	75	75
T-4	Basic Prev.	$398				$398	87	87

PLAN YEAR: 2012 ESTIMATED COST: $10,071

SectionI	Maintenance	Local	Global	Major<Crit	Major>Crit	Total	PCI before	PCI after
A-1	Basic Prev.	$1,327				$1,327	78	78
R-1	Basic Prev.	$5,938				$5,938	77	77
R-2	Basic Prev.	$368				$368	86	86
T-2	Basic Prev.	$583				$583	85	85
T-3	Basic Prev.	$1,185				$1,185	72	72
T-4	Basic Prev.	$670				$670	84	84

PLAN YEAR: 2013 ESTIMATED COST: $13,040

SectionI	Maintenance	Local	Global	Major<Crit	Major>Crit	Total	PCI before	PCI after
A-1	Basic Prev.	$1,814				$1,814	75	75
A-2	Basic Prev.	$20				$20	88	88
R-1	Basic Prev.	$7,402				$7,402	74	74
R-2	Basic Prev.	$599				$599	84	84
T-1	Basic Prev.	$26				$26	89	89
T-2	Basic Prev.	$862				$862	83	83
T-3	Basic Prev.	$1,386				$1,386	70	70
T-4	Basic Prev.	$930				$930	82	82

PLAN YEAR: 2014 ESTIMATED COST: $15,997

SectionI	Maintenance	Local	Global	Major<Crit	Major>Crit	Total	PCI before	PCI after
A-1	Basic Prev.	$2,280				$2,280	72	72
A-2	Basic Prev.	$52				$52	84	84
R-1	Basic Prev.	$8,927				$8,927	72	72
R-2	Basic Prev.	$820				$820	82	82
T-1	Basic Prev.	$80				$80	86	86
T-2	Basic Prev.	$1,134				$1,134	81	81
T-3	Basic Prev.	$1,502				$1,502	67	67
T-4	Basic Prev.	$1,202				$1,202	80	80

THREE FORKS AIRPORT

PLAN YEAR: 2015 ESTIMATED COST: $21,611

SectionI	Maintenance	Local	Global	Major<Crit	Major>Crit	Total	PCI before	PCI after
A-1	Basic Prev.	$2,683				$2,683	69	69
A-2	Basic Prev.	$82				$82	81	81
R-1	Basic Prev.	$10,330				$10,330	69	69
R-2	Basic Prev.	$1,067				$1,067	79	79
T-1	Prev. & Fog Seal	$130	$2,595			$2,725	84	89
T-2	Basic Prev.	$1,504				$1,504	78	78
T-3	Basic Prev.	$1,619				$1,619	64	64
T-4	Basic Prev.	$1,600				$1,600	77	77

PLAN YEAR: 2016 ESTIMATED COST: $21,399

SectionI	Maintenance	Local	Global	Major<Crit	Major>Crit	Total	PCI before	PCI after
A-1	Basic Prev.	$2,920				$2,920	67	67
A-2	Basic Prev.	$122				$122	78	78
R-1	Basic Prev.	$11,187				$11,187	67	67
R-2	Basic Prev.	$1,408				$1,408	77	77
T-1	Basic Prev.	$80				$80	86	86
T-2	Basic Prev.	$1,932				$1,932	76	76
T-3	Basic Prev.	$1,733				$1,733	62	62
T-4	Basic Prev.	$2,016				$2,016	75	75

PLAN YEAR: 2017 ESTIMATED COST: $23,966

SectionI	Maintenance	Local	Global	Major<Crit	Major>Crit	Total	PCI before	PCI after
A-1	Basic Prev.	$3,154				$3,154	64	64
A-2	Basic Prev.	$161				$161	75	75
R-1	Basic Prev.	$12,049				$12,049	64	64
R-2	Basic Prev.	$1,764				$1,764	75	75
T-1	Basic Prev.	$130				$130	84	84
T-2	Basic Prev.	$2,379				$2,379	74	74
T-3	Basic Prev.	$1,881				$1,881	59	59
T-4	Basic Prev.	$2,448				$2,448	73	73

PLAN YEAR: 2018 ESTIMATED COST: $26,639

SectionI	Maintenance	Local	Global	Major<Crit	Major>Crit	Total	PCI before	PCI after
A-1	Basic Prev.	$3,389				$3,389	61	61
A-2	Basic Prev.	$198				$198	72	72
R-1	Basic Prev.	$12,897				$12,897	62	62
R-2	Basic Prev.	$2,134				$2,134	72	72
T-1	Basic Prev.	$178				$178	82	82
T-2	Basic Prev.	$2,844				$2,844	71	71
T-3	Basic Prev.	$2,103				$2,103	57	57
T-4	Basic Prev.	$2,896				$2,896	70	70

PLAN YEAR: 2019 ESTIMATED COST: $29,474

SectionI	Maintenance	Local	Global	Major<Crit	Major>Crit	Total	PCI before	PCI after
A-1	Basic Prev.	$3,798				$3,798	58	58
A-2	Basic Prev.	$227				$227	69	69
R-1	Basic Prev.	$14,071				$14,071	59	59
R-2	Basic Prev.	$2,496				$2,496	70	70
T-1	Basic Prev.	$231				$231	79	79
T-2	Basic Prev.	$3,198				$3,198	69	69
T-3	Basic Prev.	$2,310				$2,310	55	55
T-4	Basic Prev.	$3,141				$3,141	67	67

PLAN YEAR: 2020 ESTIMATED COST: $911,368

SectionI	Maintenance	Local	Global	Major<Crit	Major>Crit	Total	PCI before	PCI after
A-1	Prev. & Thin AC	$4,312	$102,080			$106,392	55	69
A-2	Basic Prev.	$244				$244	67	67
R-1	Prev. & Thin AC	$15,710	$393,601			$409,311	57	69
R-2	Prev. & Thin AC	$2,705	$96,000			$98,705	67	79
T-1	Prev. & Fog Seal	$305	$2,595			$2,900	77	82
T-2	Prev. & Thin AC	$3,457	$118,640			$122,098	66	78
T-3	Prev. & Thin AC	$2,499	$53,280			$55,780	53	64
T-4	Prev. & Thin AC	$3,388	$112,551			$115,939	65	77

THREE FORKS AIRPORT

PLAN YEAR: 2021 ESTIMATED COST: $21,692

SectionI	Maintenance	Local	Global	Major<Crit	Major>Crit	Total	PCI before	PCI after
A-1	Basic Prev.	$2,921				$2,921	67	67
A-2	Basic Prev.	$259				$259	65	65
R-1	Basic Prev.	$11,189				$11,189	67	67
R-2	Basic Prev.	$1,408				$1,408	77	77
T-1	Basic Prev.	$231				$231	79	79
T-2	Basic Prev.	$1,932				$1,932	76	76
T-3	Basic Prev.	$1,733				$1,733	62	62
T-4	Basic Prev.	$2,017				$2,017	75	75

PLAN YEAR: 2022 ESTIMATED COST: $24,252

SectionI	Maintenance	Local	Global	Major<Crit	Major>Crit	Total	PCI before	PCI after
A-1	Basic Prev.	$3,154				$3,154	64	64
A-2	Basic Prev.	$273				$273	63	63
R-1	Basic Prev.	$12,049				$12,049	64	64
R-2	Basic Prev.	$1,764				$1,764	75	75
T-1	Basic Prev.	$305				$305	77	77
T-2	Basic Prev.	$2,379				$2,379	74	74
T-3	Basic Prev.	$1,881				$1,881	59	59
T-4	Basic Prev.	$2,448				$2,448	73	73

PLAN YEAR: 2023 ESTIMATED COST: $26,932

SectionI	Maintenance	Local	Global	Major<Crit	Major>Crit	Total	PCI before	PCI after
A-1	Basic Prev.	$3,389				$3,389	61	61
A-2	Basic Prev.	$286				$286	61	61
R-1	Basic Prev.	$12,897				$12,897	62	62
R-2	Basic Prev.	$2,134				$2,134	72	72
T-1	Basic Prev.	$382				$382	75	75
T-2	Basic Prev.	$2,844				$2,844	71	71
T-3	Basic Prev.	$2,103				$2,103	57	57
T-4	Basic Prev.	$2,896				$2,896	70	70

PLAN YEAR: 2024 ESTIMATED COST: $29,785

SectionI	Maintenance	Local	Global	Major<Crit	Major>Crit	Total	PCI before	PCI after
A-1	Basic Prev.	$3,798				$3,798	58	58
A-2	Basic Prev.	$301				$301	60	60
R-1	Basic Prev.	$14,078				$14,078	59	59
R-2	Basic Prev.	$2,496				$2,496	70	70
T-1	Basic Prev.	$462				$462	72	72
T-2	Basic Prev.	$3,198				$3,198	69	69
T-3	Basic Prev.	$2,310				$2,310	55	55
T-4	Basic Prev.	$3,141				$3,141	67	67

THREE FORKS AIRPORT

10/13/2009

A-1, overview

A-1, surface detail with cracks

A-2, surface detail with sealant failure & corner spall

A-2, overview

THREE FORKS AIRPORT

10/13/2009

T-1, surface detail with alligator cracking

T-1, overview with alligator cracking

T-2, surface detail with cracks

T-2, overview with alligator cracking

THREE FORKS AIRPORT

10/13/2009

T-3, overview with patches, depression, & alligator cracking

T-3, surface detail with crack & raveling

T-4, overview with stained depression

T-4, surface detail with cracks

THREE FORKS AIRPORT

10/13/2009

R-1, overview

R-1, surface detail with crack

R-2, surface detail with crack

R-2, overview

THREE FORKS

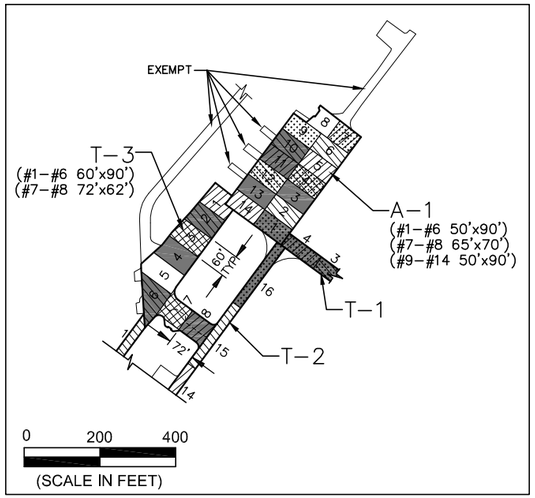

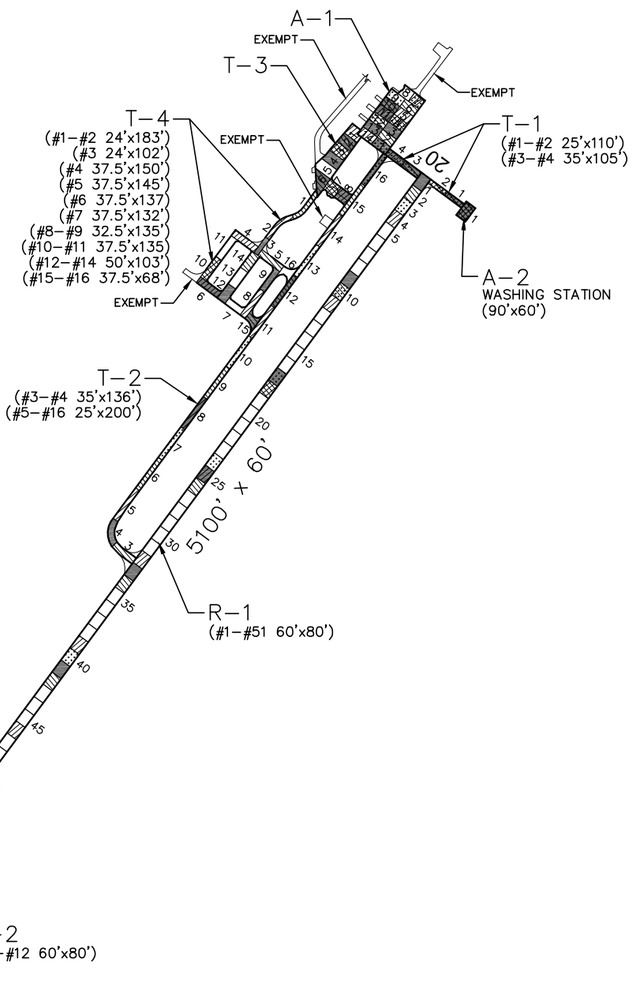

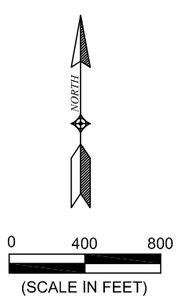

PAVEMENT STRENGTH SURVEY/PAVEMENT CONDITION SURVEY

PAVE. IDENT.	SOIL CLASS	SUB GRADE CLASS	SUBBASE COURSE	BASE COURSE	SURFACE COURSE	OVERLAY	PAVEMENT STRENGTH MAX. GROSS LOAD (LBS) SINGLE	DUAL	DUAL TAN.	REMARKS
RUNWAYS										
R–1	CBR=12			4" P–208	2.5" P–401	2" P–401	12,500			1 3
R–2			P–154	4" P–208	2.5" P–401	2" P–401	12,500			2 3
TAXIWAYS										
T–1	CBR=12			4" P–208	2.5" P–401	2" P–401	12,500			1
T–2			P–154	4" P–208	2.5" P–401	2" P–401	12,500			2
T–3			P–154	4" P–208	2.5" P–401	2" P–401	12,500			3
T–4				4" P–208	2.5" P–401		12,500			3
APRONS										
A–1	CBR=12			4" P–208	2.5" P–401	2" P–401	12,500			1 3
A–2					6" P–501		UNKNOWN			

REMARKS:

1. AIP–01, 1986, ALL PAVEMENTS ORIGINALLY BUILT.
2. AIP–02, 1993, CONSTRUCT RUNWAY EXTENSION AND PARTIAL PARALLEL TAXIWAY.
3. AIP–03, 2000, OVERLAY RUNWAY (R–1,R–2), APRON (A–1), AND TAXIWAYS (T–1,T–2,T–3); RECONSTRUCT TAXIWAY (T–4).

LEGEND

- 1997 SURVEY AREA
- 2000 SURVEY AREA (NOT SURVEYED)
- 2003 SURVEY AREA
- 2006 SURVEY AREA
- 2009 SURVEY AREA

DATE OF PAVEMENT STRENGTH SURVEY:	JUNE 8, 1990
EVALUATED BY:	J. STYBA
DATE OF MOST RECENT PAVEMENT CONDITION SURVEY:	OCT. 13, 2009
EVALUATED BY:	N. BELL

MONTANA AVIATION SYSTEM PLAN
2009 UPDATE - PAVEMENT CONDITION INDEXES

THREE FORKS AIRPORT

PREPARED FOR: MONTANA AERONAUTICS DIVISION

THREE FORKS MONTANA

DATE: NOV. 2009

PREPARED BY: RPA

THREE FORKS