LAUREL AIRPORT

Branch: 27A **APRON** **A-3**

Length: 680 LF **Width:** 243 LF **Area:** 171,360 SF **Last Const. :** 2001 **Family:** 9ACAM
From: T-1 & T-9 **To:** HANGARS **Surface:** AC

Inspections

Samples Surveyed: 5 **Total Samples:** 37 **Last Inspection Date:** 8/26/2009 **PCI: 69**

Sample # 1 **Area:** 4705 SF

Distress Description	Severity	Quantity
LONGITUDINAL/TRANSVERSE CRACKING	L	79 LF
WEATHERING/RAVELING	L	180 SF
WEATHERING/RAVELING	M	50 SF
LONGITUDINAL/TRANSVERSE CRACKING	M	13 LF
WEATHERING/RAVELING	H	4 SF
DEPRESSION	L	4 SF

Sample # 9 **Area:** 4705 SF

Distress Description	Severity	Quantity
LONGITUDINAL/TRANSVERSE CRACKING	L	128 LF
WEATHERING/RAVELING	L	200 SF
WEATHERING/RAVELING	M	25 SF
DEPRESSION	L	2 SF

Sample # 17 **Area:** 4705 SF

Distress Description	Severity	Quantity
LONGITUDINAL/TRANSVERSE CRACKING	L	142 LF
LONGITUDINAL/TRANSVERSE CRACKING	M	69 LF
WEATHERING/RAVELING	L	175 SF
OIL SPILLAGE	N	42 SF
PATCHING	L	28 SF
WEATHERING/RAVELING	M	25 SF
DEPRESSION	M	7 SF
DEPRESSION	L	4 SF

Sample # 25 **Area:** 4705 SF

Distress Description	Severity	Quantity
LONGITUDINAL/TRANSVERSE CRACKING	L	175 LF
LONGITUDINAL/TRANSVERSE CRACKING	M	66 LF
WEATHERING/RAVELING	L	180 SF
WEATHERING/RAVELING	M	43 SF
OIL SPILLAGE	N	30 SF
PATCHING	L	19 SF
DEPRESSION	M	4 SF

Sample # 33 **Area:** 4705 SF

Distress Description	Severity	Quantity
LONGITUDINAL/TRANSVERSE CRACKING	L	182 LF
WEATHERING/RAVELING	L	200 SF
WEATHERING/RAVELING	M	50 SF
LONGITUDINAL/TRANSVERSE CRACKING	M	14 LF
DEPRESSION	L	2 SF

Extrapolated Distress Quantities*

Distress Description	Severity	Quantity	Density	Deduct
LONGITUDINAL/TRANSVERSE CRACKING	L	5144 LF	3.00 %	10.05
LONGITUDINAL/TRANSVERSE CRACKING	M	1180 LF	0.69 %	9.54
WEATHERING/RAVELING	M	1406 SF	0.82 %	7.32
WEATHERING/RAVELING	H	29 SF	0.02 %	6.00
WEATHERING/RAVELING	L	6811 SF	3.97 %	5.98
DEPRESSION	M	80 SF	0.05 %	5.20
OIL SPILLAGE	N	524 SF	0.31 %	2.86
PATCHING	L	342 SF	0.20 %	2.02
DEPRESSION	L	87 SF	0.05 %	0.30

* Multiple deduct values are scaled down from their algebraic sum to keep the model consistent with experimental data.

Percent of Deduct Values Based on Distress Mechanism

0.0 **% Load** 83.0 **% Climate/Durability** 17.0 **% Other**

LAUREL AIRPORT

Branch: 27R1 **RUNWAY** **R-4**

Length: 5,200 LF **Width:** 75 LF **Area:** 390,000 SF **Last Const. :** 2000 **Family:** 9ACRMU
From: STA 10+00 **To:** STA 62+00 **Surface:** AC

Inspections

Samples Surveyed: 7 **Total Samples:** 80 **Last Inspection Date:** 8/26/2009 **PCI: 70**

Sample # 6 **Area:** 4875 SF

Distress Description	Severity	Quantity
LONGITUDINAL/TRANSVERSE CRACKING	L	169 LF
WEATHERING/RAVELING	L	244 SF
WEATHERING/RAVELING	M	24 SF
DEPRESSION	L	21 SF
LONGITUDINAL/TRANSVERSE CRACKING	M	4 LF

Sample # 18 **Area:** 4875 SF

Distress Description	Severity	Quantity
LONGITUDINAL/TRANSVERSE CRACKING	L	331 LF
WEATHERING/RAVELING	L	244 SF
WEATHERING/RAVELING	M	24 SF

Sample # 30 **Area:** 4875 SF

Distress Description	Severity	Quantity
LONGITUDINAL/TRANSVERSE CRACKING	L	100 LF
WEATHERING/RAVELING	L	244 SF
LONGITUDINAL/TRANSVERSE CRACKING	M	48 LF
DEPRESSION	L	38 SF
WEATHERING/RAVELING	M	24 SF

Sample # 42 **Area:** 4875 SF

Distress Description	Severity	Quantity
LONGITUDINAL/TRANSVERSE CRACKING	L	146 LF
WEATHERING/RAVELING	L	244 SF
LONGITUDINAL/TRANSVERSE CRACKING	M	21 LF
DEPRESSION	L	31 SF
WEATHERING/RAVELING	M	24 SF
WEATHERING/RAVELING	H	1 SF
SWELLING	L	1 SF

Sample # 54 **Area:** 4875 SF

Distress Description	Severity	Quantity
LONGITUDINAL/TRANSVERSE CRACKING	L	184 LF
WEATHERING/RAVELING	L	244 SF
WEATHERING/RAVELING	M	24 SF
DEPRESSION	L	22 SF

Sample # 66 **Area:** 4875 SF

Distress Description	Severity	Quantity
LONGITUDINAL/TRANSVERSE CRACKING	L	196 LF
WEATHERING/RAVELING	L	244 SF
LONGITUDINAL/TRANSVERSE CRACKING	M	16 LF
WEATHERING/RAVELING	M	24 SF
DEPRESSION	L	20 SF

Sample # 78 **Area:** 4875 SF

Distress Description	Severity	Quantity
LONGITUDINAL/TRANSVERSE CRACKING	L	524 LF
WEATHERING/RAVELING	L	244 SF
WEATHERING/RAVELING	M	24 SF

Extrapolated Distress Quantities*

Distress Description	Severity	Quantity	Density	Deduct
LONGITUDINAL/TRANSVERSE CRACKING	L	18862 LF	4.84 %	14.42
WEATHERING/RAVELING	L	19520 SF	5.01 %	6.81
WEATHERING/RAVELING	M	1920 SF	0.49 %	6.11
LONGITUDINAL/TRANSVERSE CRACKING	M	1017 LF	0.26 %	6.00
WEATHERING/RAVELING	H	11 SF	0.00 %	6.00
DEPRESSION	L	1509 SF	0.39 %	2.37
SWELLING	L	11 SF	0.00 %	1.00

* Multiple deduct values are scaled down from their algebraic sum to keep the model consistent with experimental data.

Percent of Deduct Values Based on Distress Mechanism

0.0 **% Load** 92.0 **% Climate/Durability** 8.0 **% Other**

LAUREL AIRPORT

Branch: 27T **TAXIWAY** **T-1**

Length: 2,380 LF **Width:** 36 LF **Area:** 85,680 SF **Last Const. :** 1988 **Family:** 9ACRMU

From: RWY 13-31 AND T-2 **To:** A-1 AND T-2 **Surface:** AC

Inspections

Samples Surveyed: 5 **Total Samples:** 15 **Last Inspection Date:** 8/26/2009 **PCI: 51**

Sample # 2 **Area:** 4500 SF

Distress Description	Severity	Quantity
LONGITUDINAL/TRANSVERSE CRACKING	L	282 LF
WEATHERING/RAVELING	L	675 SF
WEATHERING/RAVELING	M	450 SF
LONGITUDINAL/TRANSVERSE CRACKING	M	93 LF
WEATHERING/RAVELING	H	45 SF
DEPRESSION	L	45 SF
LONGITUDINAL/TRANSVERSE CRACKING	H	5 LF

Sample # 4 **Area:** 4500 SF

Distress Description	Severity	Quantity
LONGITUDINAL/TRANSVERSE CRACKING	L	331 LF
WEATHERING/RAVELING	L	600 SF
LONGITUDINAL/TRANSVERSE CRACKING	M	142 LF
WEATHERING/RAVELING	M	400 SF
WEATHERING/RAVELING	H	30 SF
DEPRESSION	L	25 SF
SWELLING	M	10 SF
PATCHING	L	3 SF
OIL SPILLAGE	N	1 SF

Sample # 8 **Area:** 5040 SF

Distress Description	Severity	Quantity
LONGITUDINAL/TRANSVERSE CRACKING	L	458 LF
PATCHING	L	1225 SF
WEATHERING/RAVELING	L	756 SF
WEATHERING/RAVELING	M	350 SF
DEPRESSION	L	93 SF
LONGITUDINAL/TRANSVERSE CRACKING	M	8 LF
DEPRESSION	M	22 SF

Sample # 10 **Area:** 5040 SF

Distress Description	Severity	Quantity
LONGITUDINAL/TRANSVERSE CRACKING	L	503 LF
WEATHERING/RAVELING	L	756 SF
WEATHERING/RAVELING	M	350 SF
DEPRESSION	L	63 SF
LONGITUDINAL/TRANSVERSE CRACKING	M	11 LF
DEPRESSION	M	17 SF
WEATHERING/RAVELING	H	1 SF

Sample # 12 **Area:** 5040 SF

Distress Description	Severity	Quantity
LONGITUDINAL/TRANSVERSE CRACKING	L	329 LF
WEATHERING/RAVELING	L	756 SF
WEATHERING/RAVELING	M	350 SF
DEPRESSION	L	84 SF
DEPRESSION	M	9 SF

Extrapolated Distress Quantities*

Distress Description	Severity	Quantity	Density	Deduct
LONGITUDINAL/TRANSVERSE CRACKING	L	6762 LF	7.89 %	20.16
WEATHERING/RAVELING	M	6749 SF	7.88 %	18.60
WEATHERING/RAVELING	L	12585 SF	14.69 %	11.87
LONGITUDINAL/TRANSVERSE CRACKING	M	902 LF	1.05 %	11.50
PATCHING	L	4362 SF	5.09 %	10.01
SWELLING	M	36 SF	0.04 %	10.00
WEATHERING/RAVELING	H	270 SF	0.32 %	8.92
DEPRESSION	L	1101 SF	1.29 %	8.17
LONGITUDINAL/TRANSVERSE CRACKING	H	18 LF	0.02 %	7.50
DEPRESSION	M	171 SF	0.20 %	6.18
OIL SPILLAGE	N	4 SF	0.00 %	2.00

* Multiple deduct values are scaled down from their algebraic sum to keep the model consistent with experimental data.

LAUREL AIRPORT

Branch: 27T **TAXIWAY** **T-1**

Percent of Deduct Values Based on Distress Mechanism

0.0 **% Load** 77.0 **% Climate/Durability** 23.0 **% Other**

LAUREL AIRPORT

Branch: 27T **TAXIWAY** **T-2**

Length: 1,357 LF **Width:** 38 LF **Area:** 51,566 SF **Last Const. :** 1988 **Family:** 9ACRMU

From: T-3 @R-1 STA 14+50, END **To:** T-1 @R-1 STA21+50, END **Surface:** AC

Inspections

Samples Surveyed: 3 **Total Samples:** 6 **Last Inspection Date:** 8/26/2009 **PCI: 38**

Sample # 1 **Area:** 5040 SF

Distress Description	Severity	Quantity
PATCHING	L	2100 SF
LONGITUDINAL/TRANSVERSE CRACKING	L	323 LF
WEATHERING/RAVELING	L	756 SF
WEATHERING/RAVELING	M	302 SF
ALLIGATOR CRACKING	L	170 SF
LONGITUDINAL/TRANSVERSE CRACKING	M	17 LF
DEPRESSION	L	37 SF

Sample # 3 **Area:** 5040 SF

Distress Description	Severity	Quantity
LONGITUDINAL/TRANSVERSE CRACKING	L	437 LF
WEATHERING/RAVELING	L	1260 SF
WEATHERING/RAVELING	M	504 SF
LONGITUDINAL/TRANSVERSE CRACKING	M	65 LF
WEATHERING/RAVELING	H	95 SF
ALLIGATOR CRACKING	L	95 SF
DEPRESSION	L	42 SF
LONGITUDINAL/TRANSVERSE CRACKING	H	9 LF
ALLIGATOR CRACKING	M	6 SF

Sample # 6 **Area:** 5338 SF

Distress Description	Severity	Quantity
LONGITUDINAL/TRANSVERSE CRACKING	L	585 LF
WEATHERING/RAVELING	L	1334 SF
PATCHING	L	1260 SF
WEATHERING/RAVELING	M	534 SF
LONGITUDINAL/TRANSVERSE CRACKING	M	27 LF
DEPRESSION	L	73 SF
BLEEDING	N	17 SF
WEATHERING/RAVELING	H	4 SF

Extrapolated Distress Quantities*

Distress Description	Severity	Quantity	Density	Deduct
ALLIGATOR CRACKING	L	886 SF	1.72 %	25.62
LONGITUDINAL/TRANSVERSE CRACKING	L	4500 LF	8.73 %	21.46
PATCHING	L	11238 SF	21.79 %	21.18
WEATHERING/RAVELING	M	4482 SF	8.69 %	19.43
WEATHERING/RAVELING	L	11204 SF	21.73 %	14.23
WEATHERING/RAVELING	H	331 SF	0.64 %	12.69
ALLIGATOR CRACKING	M	20 SF	0.04 %	10.00
LONGITUDINAL/TRANSVERSE CRACKING	M	365 LF	0.71 %	9.65
LONGITUDINAL/TRANSVERSE CRACKING	H	30 LF	0.06 %	7.50
DEPRESSION	L	508 SF	0.99 %	6.56
BLEEDING	N	57 SF	0.11 %	0.00

* Multiple deduct values are scaled down from their algebraic sum to keep the model consistent with experimental data.

Percent of Deduct Values Based on Distress Mechanism

24.0 **% Load** 72.0 **% Climate/Durability** 4.0 **% Other**

LAUREL AIRPORT

Branch: 27T **TAXIWAY** **T-8**

Length: 2,700 LF **Width:** 35 LF **Area:** 98,550 SF **Last Const. :** 2000 **Family:** 9ACRMU
From: R-4 **To:** T-1 **Surface:** AC

Inspections

Samples Surveyed: 5 **Total Samples:** 20 **Last Inspection Date:** 8/26/2009 **PCI: 75**

Sample # 5 **Area:** 4900 SF

Distress Description	Severity	Quantity
LONGITUDINAL/TRANSVERSE CRACKING	L	114 LF
WEATHERING/RAVELING	L	245 SF
WEATHERING/RAVELING	M	25 SF
WEATHERING/RAVELING	H	3 SF
SWELLING	L	3 SF
BLEEDING	N	3 SF

Sample # 8 **Area:** 4900 SF

Distress Description	Severity	Quantity
LONGITUDINAL/TRANSVERSE CRACKING	L	146 LF
WEATHERING/RAVELING	L	245 SF
WEATHERING/RAVELING	M	74 SF
BLEEDING	N	2 SF

Sample # 11 **Area:** 4900 SF

Distress Description	Severity	Quantity
LONGITUDINAL/TRANSVERSE CRACKING	L	231 LF
WEATHERING/RAVELING	L	245 SF
WEATHERING/RAVELING	M	24 SF
LONGITUDINAL/TRANSVERSE CRACKING	M	4 LF

Sample # 14 **Area:** 4900 SF

Distress Description	Severity	Quantity
LONGITUDINAL/TRANSVERSE CRACKING	L	199 LF
WEATHERING/RAVELING	M	245 SF
WEATHERING/RAVELING	L	49 SF
WEATHERING/RAVELING	H	2 SF
OIL SPILLAGE	N	1 SF
BLEEDING	N	1 SF

Sample # 17 **Area:** 4800 SF

Distress Description	Severity	Quantity
LONGITUDINAL/TRANSVERSE CRACKING	L	159 LF
WEATHERING/RAVELING	L	245 SF
WEATHERING/RAVELING	M	24 SF

Extrapolated Distress Quantities*

Distress Description	Severity	Quantity	Density	Deduct
LONGITUDINAL/TRANSVERSE CRACKING	L	3430 LF	3.48 %	11.26
WEATHERING/RAVELING	M	1583 SF	1.61 %	9.47
WEATHERING/RAVELING	L	4156 SF	4.22 %	6.18
WEATHERING/RAVELING	H	20 SF	0.02 %	6.00
LONGITUDINAL/TRANSVERSE CRACKING	M	16 LF	0.02 %	4.00
OIL SPILLAGE	N	4 SF	0.00 %	2.00
SWELLING	L	12 SF	0.01 %	1.00
BLEEDING	N	24 SF	0.02 %	0.00

* Multiple deduct values are scaled down from their algebraic sum to keep the model consistent with experimental data.

Percent of Deduct Values Based on Distress Mechanism

0.0 **% Load** 92.0 **% Climate/Durability** 8.0 **% Other**

LAUREL AIRPORT

Branch: 27T **TAXIWAY** **T-9**

Length: 1,891 LF **Width:** 35 LF **Area:** 67,060 SF **Last Const. :** 2001 **Family:** 9ACRMU
From: R-4 **To:** A-3 & T-1 **Surface:** AC

Inspections

Samples Surveyed: 5 **Total Samples:** 14 **Last Inspection Date:** 8/26/2009 **PCI: 80**

Sample # 2 **Area:** 4095 SF

Distress Description	Severity	Quantity
WEATHERING/RAVELING	L	205 SF
WEATHERING/RAVELING	M	49 SF
LONGITUDINAL/TRANSVERSE CRACKING	L	2 LF
PATCHING	L	1 SF
BLEEDING	N	1 SF

Sample # 5 **Area:** 4900 SF

Distress Description	Severity	Quantity
WEATHERING/RAVELING	L	245 SF
WEATHERING/RAVELING	M	49 SF
LONGITUDINAL/TRANSVERSE CRACKING	L	3 LF
WEATHERING/RAVELING	H	1 SF
DEPRESSION	L	1 SF
PATCHING	L	1 SF

Sample # 6 **Area:** 4900 SF

Distress Description	Severity	Quantity
WEATHERING/RAVELING	L	245 SF
WEATHERING/RAVELING	M	49 SF
WEATHERING/RAVELING	H	1 SF
DEPRESSION	M	1 SF

Sample # 12 **Area:** 4900 SF

Distress Description	Severity	Quantity
LONGITUDINAL/TRANSVERSE CRACKING	L	121 LF
WEATHERING/RAVELING	L	245 SF
WEATHERING/RAVELING	M	24 SF
PATCHING	L	1 SF

Sample # 13 **Area:** 4900 SF

Distress Description	Severity	Quantity
WEATHERING/RAVELING	L	245 SF
LONGITUDINAL/TRANSVERSE CRACKING	L	52 LF
WEATHERING/RAVELING	M	26 SF
BLEEDING	N	1 SF

Extrapolated Distress Quantities*

Distress Description	Severity	Quantity	Density	Deduct
WEATHERING/RAVELING	M	558 SF	0.83 %	7.35
WEATHERING/RAVELING	L	3354 SF	5.00 %	6.80
WEATHERING/RAVELING	H	6 SF	0.01 %	6.00
DEPRESSION	M	3 SF	0.00 %	5.20
LONGITUDINAL/TRANSVERSE CRACKING	L	504 LF	0.75 %	4.47
PATCHING	L	8 SF	0.01 %	2.00
DEPRESSION	L	3 SF	0.00 %	0.30
BLEEDING	N	6 SF	0.01 %	0.00

* Multiple deduct values are scaled down from their algebraic sum to keep the model consistent with experimental data.

Percent of Deduct Values Based on Distress Mechanism

0.0 **% Load** 83.0 **% Climate/Durability** 17.0 **% Other**

LAUREL AIRPORT

FIRST YEAR LOCAL:2010 LOCAL REPAIR COST: $35,192

Section	Distress Description	Severity	Quantity	Work Description	Quantity	Cost	Policy
A-3	L & T CR	M	1181 LF	Crack Sealing - AC	1181 LF	$1,771	PREV.
A-3	DEPRESSION	M	81 SF	Patching - AC Deep	121 SF	$4,446	PREV.
A-3	OIL SPILLAGE	N	525 SF	Patching - AC Shallow	621 SF	$9,309	PREV.
R-4	L & T CR	M	1018 LF	Crack Sealing - AC	1018 LF	$1,526	PREV.
T-1	L & T CR	H	18 LF	Crack Sealing - AC	18 LF	$27	PREV.
T-1	OIL SPILLAGE	N	4 SF	Patching - AC Shallow	16 SF	$227	PREV.
T-1	L & T CR	M	903 LF	Crack Sealing - AC	903 LF	$1,354	PREV.
T-1	SWELLING	M	36 SF	Patching - AC Deep	64 SF	$2,350	PREV.
T-1	DEPRESSION	M	171 SF	Patching - AC Deep	228 SF	$8,401	PREV.
T-2	L & T CR	H	31 LF	Crack Sealing - AC	31 LF	$45	SAFET
T-2	WEATH/RAVEL	H	332 SF	Patching - AC Shallow	332 SF	$4,967	SAFET
T-8	L & T CR	M	17 LF	Crack Sealing - AC	17 LF	$24	PREV.
T-8	OIL SPILLAGE	N	5 SF	Patching - AC Shallow	17 SF	$242	PREV.
T-9	DEPRESSION	M	3 SF	Patching - AC Deep	14 SF	$503	PREV.

FIFTEEN YEAR PROJECTIONS: ESTIMATED AVERAGE ANNUAL COST: $212,193

PLAN YEAR: 2010 ESTIMATED COST: $927,445

SectionI	Maintenance	Local	Global	Major<Crit	Major>Crit	Total	PCI before	PCI after
A-3	Basic Prev.	$15,526				$15,526	68	68
R-4	Prev. & Thin AC	$1,526	$624,002			$625,528	69	81
T-1	Prev. & Thin AC	$12,359	$137,088			$149,447	50	61
T-2	Reconstruct			$136,175		$136,175	37	100
T-8	Basic Prev.	$266				$266	74	74
T-9	Basic Prev.	$503				$503	79	79

PLAN YEAR: 2011 ESTIMATED COST: $300,074

SectionI	Maintenance	Local	Global	Major<Crit	Major>Crit	Total	PCI before	PCI after
A-3	Prev. & Thin AC	$8,148	$274,177			$282,324	65	80
R-4	Basic Prev.	$7,475				$7,475	79	79
T-1	Basic Prev.	$4,976				$4,976	59	59
T-8	Basic Prev.	$3,673				$3,673	72	72
T-9	Basic Prev.	$1,625				$1,625	77	77

PLAN YEAR: 2012 ESTIMATED COST: $25,670

SectionI	Maintenance	Local	Global	Major<Crit	Major>Crit	Total	PCI before	PCI after
A-3	Basic Prev.	$4,204				$4,204	77	77
R-4	Basic Prev.	$9,710				$9,710	77	77
T-1	Basic Prev.	$5,539				$5,539	56	56
T-8	Basic Prev.	$4,191				$4,191	69	69
T-9	Basic Prev.	$2,024				$2,024	74	74

PLAN YEAR: 2013 ESTIMATED COST: $30,675

SectionI	Maintenance	Local	Global	Major<Crit	Major>Crit	Total	PCI before	PCI after
A-3	Basic Prev.	$5,481				$5,481	74	74
R-4	Basic Prev.	$12,051				$12,051	74	74
T-1	Basic Prev.	$6,065				$6,065	54	54
T-2	Basic Prev.	$102				$102	89	89
T-8	Basic Prev.	$4,537				$4,537	66	66
T-9	Basic Prev.	$2,440				$2,440	72	72

PLAN YEAR: 2014 ESTIMATED COST: $35,751

SectionI	Maintenance	Local	Global	Major<Crit	Major>Crit	Total	PCI before	PCI after
A-3	Basic Prev.	$6,713				$6,713	71	71
R-4	Basic Prev.	$14,478				$14,478	72	72
T-1	Basic Prev.	$6,539				$6,539	52	52
T-2	Basic Prev.	$318				$318	86	86
T-8	Basic Prev.	$4,882				$4,882	64	64
T-9	Basic Prev.	$2,820				$2,820	69	69

PLAN YEAR: 2015 ESTIMATED COST: $50,149

SectionI	Maintenance	Local	Global	Major<Crit	Major>Crit	Total	PCI before	PCI after
A-3	Basic Prev.	$7,517				$7,517	68	68
R-4	Basic Prev.	$16,558				$16,558	69	69
T-1	Basic Prev.	$6,971				$6,971	50	50
T-2	Prev. & Fog Seal	$516	$10,313			$10,830	84	89
T-8	Basic Prev.	$5,219				$5,219	61	61
T-9	Basic Prev.	$3,054				$3,054	67	67

LAUREL AIRPORT

PLAN YEAR: 2016 ESTIMATED COST: $216,408

SectionI	Maintenance	Local	Global	Major<Crit	Major>Crit	Total	PCI before	PCI after
A-3	Basic Prev.	$8,148				$8,148	65	65
R-4	Basic Prev.	$17,917				$17,917	66	66
T-1	Reconstruct			$180,992		$180,992	49	100
T-2	Basic Prev.	$318				$318	86	86
T-8	Basic Prev.	$5,745				$5,745	59	59
T-9	Basic Prev.	$3,288				$3,288	64	64

PLAN YEAR: 2017 ESTIMATED COST: $38,490

SectionI	Maintenance	Local	Global	Major<Crit	Major>Crit	Total	PCI before	PCI after
A-3	Basic Prev.	$8,778				$8,778	62	62
R-4	Basic Prev.	$19,283				$19,283	64	64
T-2	Basic Prev.	$516				$516	84	84
T-8	Basic Prev.	$6,393				$6,393	56	56
T-9	Basic Prev.	$3,519				$3,519	61	61

PLAN YEAR: 2018 ESTIMATED COST: $41,664

SectionI	Maintenance	Local	Global	Major<Crit	Major>Crit	Total	PCI before	PCI after
A-3	Basic Prev.	$9,504				$9,504	60	60
R-4	Basic Prev.	$20,616				$20,616	61	61
T-2	Basic Prev.	$706				$706	82	82
T-8	Basic Prev.	$6,992				$6,992	54	54
T-9	Basic Prev.	$3,845				$3,845	59	59

PLAN YEAR: 2019 ESTIMATED COST: $46,454

SectionI	Maintenance	Local	Global	Major<Crit	Major>Crit	Total	PCI before	PCI after
A-3	Basic Prev.	$10,867				$10,867	57	57
R-4	Basic Prev.	$22,670				$22,670	59	59
T-1	Basic Prev.	$169				$169	89	89
T-2	Basic Prev.	$920				$920	79	79
T-8	Basic Prev.	$7,538				$7,538	52	52
T-9	Basic Prev.	$4,290				$4,290	57	57

PLAN YEAR: 2020 ESTIMATED COST: $686,288

SectionI	Maintenance	Local	Global	Major<Crit	Major>Crit	Total	PCI before	PCI after
A-3	Basic Prev.	$12,263				$12,263	54	54
R-4	Prev. & Thin AC	$25,236	$624,002			$649,237	56	69
T-1	Basic Prev.	$529				$529	86	86
T-2	Prev. & Fog Seal	$1,213	$10,313			$11,526	77	82
T-8	Basic Prev.	$8,032				$8,032	50	50
T-9	Basic Prev.	$4,701				$4,701	54	54

PLAN YEAR: 2021 ESTIMATED COST: $538,195

SectionI	Maintenance	Local	Global	Major<Crit	Major>Crit	Total	PCI before	PCI after
A-3	Prev. & Thin AC	$13,721	$274,177			$287,898	51	65
R-4	Basic Prev.	$17,920				$17,920	66	66
T-1	Prev. & Fog Seal	$858	$17,136			$17,994	84	89
T-2	Basic Prev.	$920				$920	79	79
T-8	Reconstruct			$208,382		$208,382	49	100
T-9	Basic Prev.	$5,081				$5,081	52	52

PLAN YEAR: 2022 ESTIMATED COST: $35,219

SectionI	Maintenance	Local	Global	Major<Crit	Major>Crit	Total	PCI before	PCI after
A-3	Basic Prev.	$8,775				$8,775	62	62
R-4	Basic Prev.	$19,283				$19,283	64	64
T-1	Basic Prev.	$529				$529	86	86
T-2	Basic Prev.	$1,213				$1,213	77	77
T-9	Basic Prev.	$5,420				$5,420	51	51

PLAN YEAR: 2023 ESTIMATED COST: $173,681

SectionI	Maintenance	Local	Global	Major<Crit	Major>Crit	Total	PCI before	PCI after
A-3	Basic Prev.	$9,499				$9,499	60	60
R-4	Basic Prev.	$20,616				$20,616	61	61
T-1	Basic Prev.	$858				$858	84	84
T-2	Basic Prev.	$1,519				$1,519	75	75
T-9	Reconstruct			$141,189		$141,189	49	100

PLAN YEAR: 2024 ESTIMATED COST: $36,735

SectionI	Maintenance	Local	Global	Major<Crit	Major>Crit	Total	PCI before	PCI after
A-3	Basic Prev.	$10,862				$10,862	57	57
R-4	Basic Prev.	$22,670				$22,670	59	59
T-1	Basic Prev.	$1,173				$1,173	82	82
T-2	Basic Prev.	$1,837				$1,837	72	72
T-8	Basic Prev.	$192				$192	89	89

LAUREL AIRPORT

8/26/2009

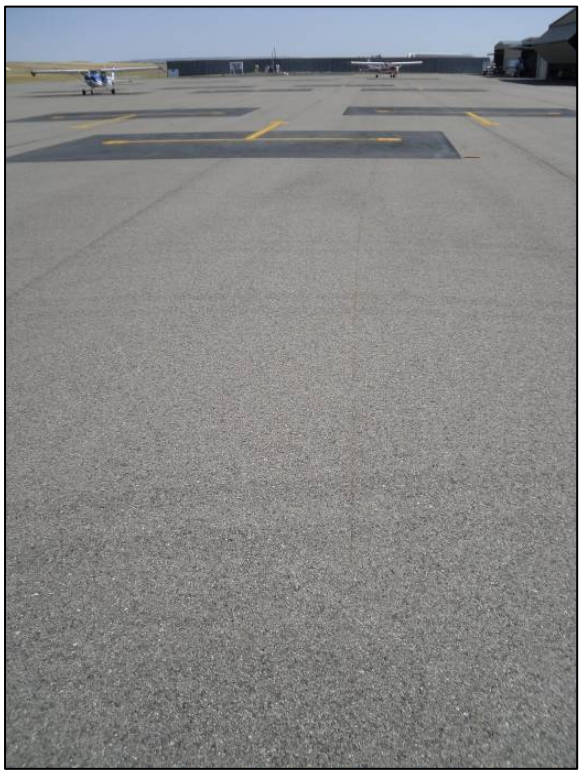

A-3, overview with rusting

A-3, surface detail with bleeding

T-1, overview

T-1, surface detail with crack & vegetation

LAUREL AIRPORT

8/26/2009

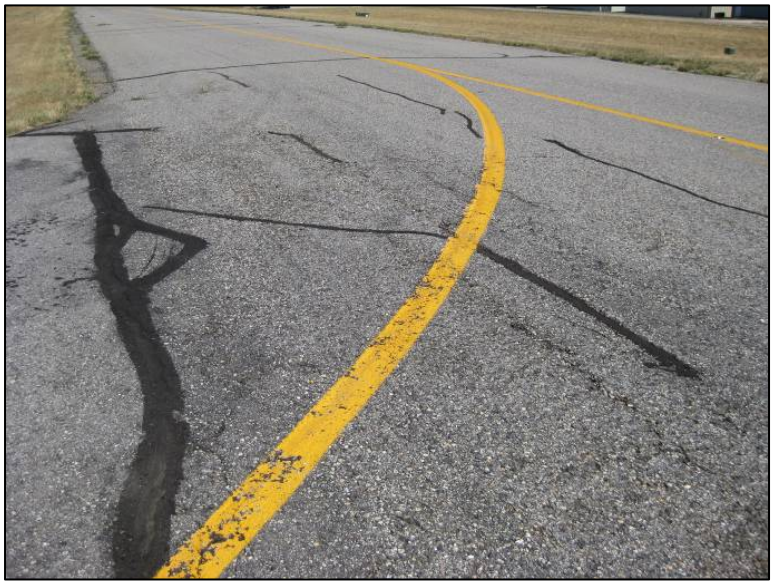

T-2, overview

T-2, surface detail with raveling & alligator cracking

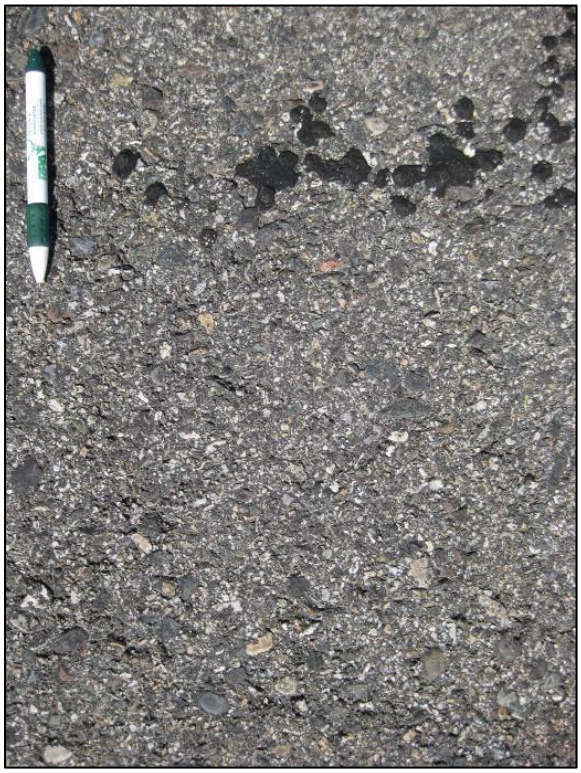

T-8, surface detail with bleeding

T-8, overview

LAUREL AIRPORT

8/26/2009

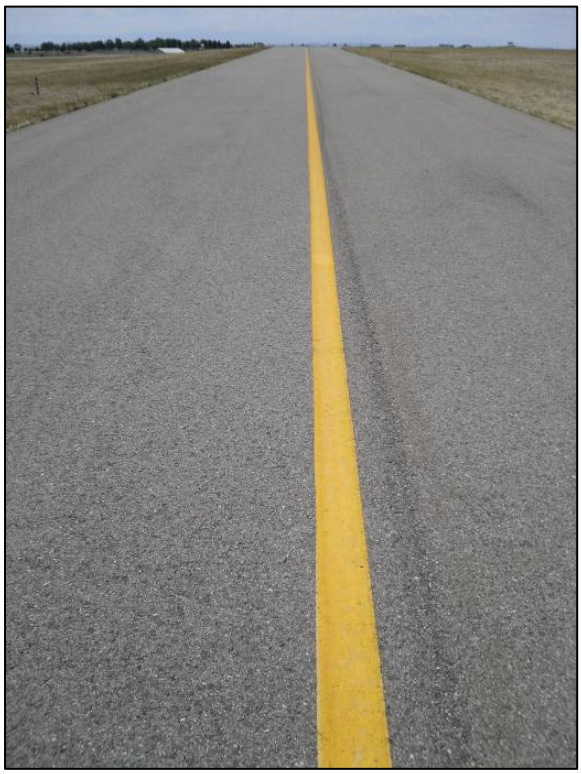

T-9, overview

T-9, surface detail

R-4, overview

R-4, surface detail with crack & depression

LAUREL

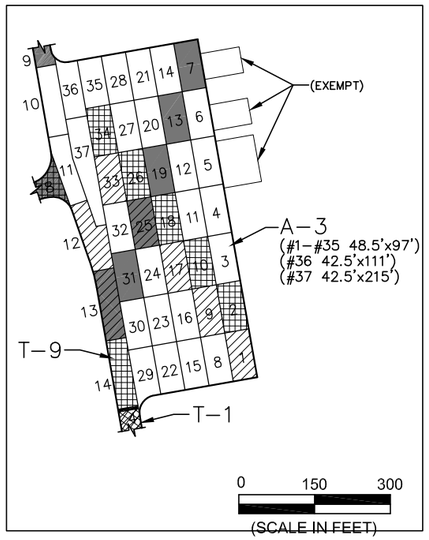

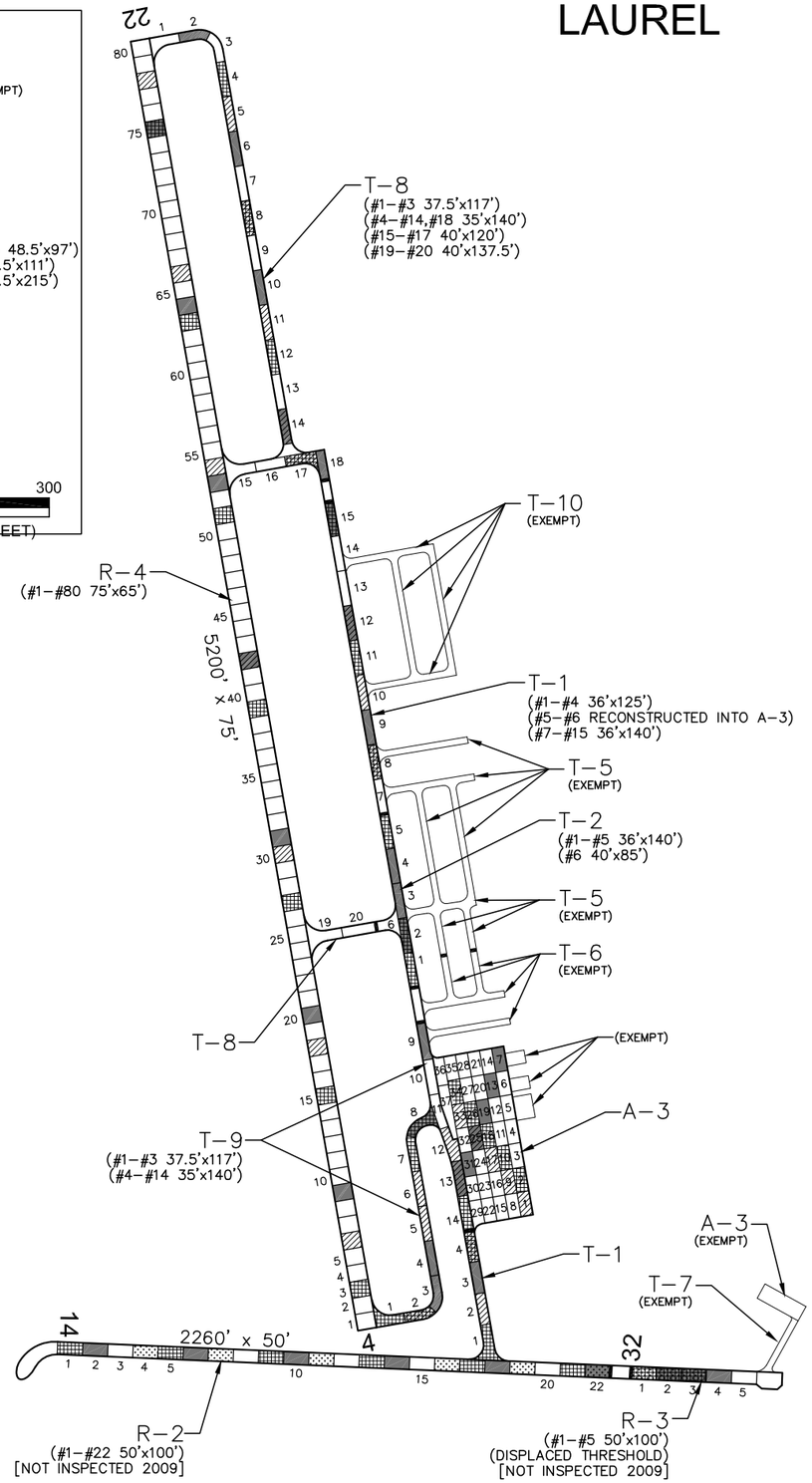

PAVEMENT STRENGTH SURVEY/PAVEMENT CONDITION SURVEY

PAVE. IDENT.	SOIL CLASS	SUB GRADE CLASS	SUBBASE COURSE	BASE COURSE	SURFACE COURSE	OVERLAY	PAVEMENT STRENGTH MAX. GROSS LOAD (LBS) SINGLE	DUAL	DUAL TAN.	REMARKS
RUNWAYS										
R–2	E–7	F7,CBR=6.5			6" ROAD MIX		3,000			
R–3			UNKNOWN							
R–4		CBR=4	FABRIC	12" P–208	4" P–401		12,500			6 9
TAXIWAYS										
T–1		F7,CBR=6.5		6.5" P–208	2" P–401		12,500			5 8 9
T–2		F7,CBR=6.5		6" P–208	P–609	2" P–401	14,000			4 5 8 9
T–8		CBR=4	FABRIC	12" P–208	4" P–401		12,500			6 9
T–9		CBR=4	FABRIC	12" P–208	4" P–401		12,500			7 9
APRONS										
A–3		CBR=4	FABRIC	12" P–208	4" P–401		6,000			7 9

REMARKS:

RUNWAY 3–21 POOR CONDITION, RUNWAY 13–31 FAIR CONDITION

1. FAAP, 1967
2. ADAP–01, 1980
3. ADAP–02, 1981
4. AIP–01, 1983
5. AIP–02, 1988
6. AIP–06, 2000, CONSTRUCT RUNWAY 4–22, CONSTRUCT TAXIWAY A "EAST" (T–8).
7. AIP–07, 2001, CONSTRUCT TAXIWAY A "WEST" (T–9), EXPAND APRON (A–3).
8. AIP–08, 2002, RECONSTRUCT TAXILANES (T–5,T–6); CONSTRUCT TAXILANES (T–10); CRACK SEAL, FOG SEAL, AND REMARK TAXIWAYS (T–1,T–2).
9. AIP–012–2007, CRACK SEAL AND REMARK PAVEMENTS.

LEGEND

- 1997 SURVEY AREA
- 2000 SURVEY AREA (NOT SURVEYED)
- 2003 SURVEY AREA
- 2006 SURVEY AREA
- 2009 SURVEY AREA

DATE OF PAVEMENT STRENGTH SURVEY:	SEPT. 8, 1988
EVALUATED BY:	J. STYBA
DATE OF MOST RECENT PAVEMENT CONDITION SURVEY:	AUG. 26, 2009
EVALUATED BY:	B. BURKLAND

MONTANA AVIATION SYSTEM PLAN
2009 UPDATE - PAVEMENT CONDITION INDEXES

LAUREL MUNICIPAL

PREPARED FOR: MONTANA AERONAUTICS DIVISION

LAUREL
MONTANA

DATE: NOV. 2009

PREPARED BY: RPA

LAUREL