BAKER AIRPORT

Branch: 56A **APRON** **A-2A**

Length: 400 LF **Width:** 300 LF **Area:** 120,000 SF **Last Const. :** 1992 **Family:** 9ACAM
From: MAIN APRON **To:** **Surface:** AAC

Inspections

Samples Surveyed: 5 **Total Samples:** 16 **Last Inspection Date:** 7/16/2009 **PCI: 70**

Sample # 1 **Area:** 5250 SF

Distress Description	Severity	Quantity
LONGITUDINAL/TRANSVERSE CRACKING	L	191 LF
WEATHERING/RAVELING	L	415 SF
LONGITUDINAL/TRANSVERSE CRACKING	M	24 LF
LONGITUDINAL/TRANSVERSE CRACKING	H	1 LF

Sample # 5 **Area:** 5250 SF

Distress Description	Severity	Quantity
WEATHERING/RAVELING	L	510 SF
LONGITUDINAL/TRANSVERSE CRACKING	L	140 LF
LONGITUDINAL/TRANSVERSE CRACKING	M	11 LF
DEPRESSION	H	2 SF
PATCHING	M	2 SF
BLEEDING	N	2 SF
OIL SPILLAGE	N	2 SF
WEATHERING/RAVELING	M	1 SF

Sample # 8 **Area:** 5250 SF

Distress Description	Severity	Quantity
LONGITUDINAL/TRANSVERSE CRACKING	L	179 LF
WEATHERING/RAVELING	L	510 SF
LONGITUDINAL/TRANSVERSE CRACKING	M	29 LF
OIL SPILLAGE	N	5 SF
DEPRESSION	H	4 SF
PATCHING	M	4 SF
BLEEDING	N	1 SF

Sample # 14 **Area:** 5250 SF

Distress Description	Severity	Quantity
WEATHERING/RAVELING	L	510 SF
LONGITUDINAL/TRANSVERSE CRACKING	L	150 LF
LONGITUDINAL/TRANSVERSE CRACKING	M	42 LF
OIL SPILLAGE	N	4 SF
PATCHING	L	2 SF

Sample # 16 **Area:** 5250 SF

Distress Description	Severity	Quantity
LONGITUDINAL/TRANSVERSE CRACKING	L	186 LF
WEATHERING/RAVELING	L	360 SF
LONGITUDINAL/TRANSVERSE CRACKING	M	88 LF
WEATHERING/RAVELING	M	32 SF

Extrapolated Distress Quantities*

Distress Description	Severity	Quantity	Density	Deduct
DEPRESSION	H	27 SF	0.02 %	12.00
LONGITUDINAL/TRANSVERSE CRACKING	L	3868 LF	3.22 %	10.62
LONGITUDINAL/TRANSVERSE CRACKING	M	887 LF	0.74 %	9.84
WEATHERING/RAVELING	L	10537 SF	8.78 %	9.20
LONGITUDINAL/TRANSVERSE CRACKING	H	5 LF	0.00 %	7.50
PATCHING	M	27 SF	0.02 %	6.20
WEATHERING/RAVELING	M	151 SF	0.13 %	4.17
OIL SPILLAGE	N	50 SF	0.04 %	2.00
PATCHING	L	9 SF	0.01 %	2.00
BLEEDING	N	14 SF	0.01 %	0.00

* Multiple deduct values are scaled down from their algebraic sum to keep the model consistent with experimental data.

Percent of Deduct Values Based on Distress Mechanism

0.0 **% Load** 78.0 **% Climate/Durability** 22.0 **% Other**

BAKER AIRPORT

Branch: 56A **APRON** **A-3A**

Length: 420 LF **Width:** 35 LF **Area:** 14,700 SF **Last Const. :** 1992 **Family:** 9ACPL
From: WEST EDGE of APRON **To:** **Surface:** AAC

Inspections

Samples Surveyed: 1 **Total Samples:** 1 **Last Inspection Date:** 7/16/2009 **PCI: 69**

Sample # 1 **Area:** 5100 SF

Distress Description	Severity	Quantity
LONGITUDINAL/TRANSVERSE CRACKING	L	179 LF
WEATHERING/RAVELING	L	510 SF
LONGITUDINAL/TRANSVERSE CRACKING	M	23 LF
DEPRESSION	L	18 SF
BLEEDING	N	10 SF
WEATHERING/RAVELING	M	8 SF
OIL SPILLAGE	N	1 SF

Extrapolated Distress Quantities*

Distress Description	Severity	Quantity	Density	Deduct
LONGITUDINAL/TRANSVERSE CRACKING	L	516 LF	3.51 %	11.33
WEATHERING/RAVELING	L	1470 SF	10.00 %	9.83
LONGITUDINAL/TRANSVERSE CRACKING	M	66 LF	0.45 %	7.92
WEATHERING/RAVELING	M	23 SF	0.16 %	4.38
DEPRESSION	L	52 SF	0.35 %	2.08
OIL SPILLAGE	N	3 SF	0.02 %	2.00
BLEEDING	N	29 SF	0.20 %	1.08

* Multiple deduct values are scaled down from their algebraic sum to keep the model consistent with experimental data.

Percent of Deduct Values Based on Distress Mechanism

0.0 **% Load** 87.0 **% Climate/Durability** 13.0 **% Other**

BAKER AIRPORT

Branch: 56A **APRON** **A-5**

Length: 200 LF **Width:** 200 LF **Area:** 40,000 SF **Last Const. :** 1997 **Family:** 9ACAM

From: Apron **To:** Hangars **Surface:** AC

Inspections

Samples Surveyed: 4 **Total Samples:** 8 **Last Inspection Date:** 7/16/2009 **PCI: 66**

Sample # 2 **Area:** 5000 SF

Distress Description	Severity	Quantity
WEATHERING/RAVELING	L	500 SF
LONGITUDINAL/TRANSVERSE CRACKING	M	76 LF
LONGITUDINAL/TRANSVERSE CRACKING	L	69 LF
DEPRESSION	L	36 SF
WEATHERING/RAVELING	M	22 SF

Sample # 3 **Area:** 5000 SF

Distress Description	Severity	Quantity
WEATHERING/RAVELING	L	500 SF
LONGITUDINAL/TRANSVERSE CRACKING	M	119 LF
LONGITUDINAL/TRANSVERSE CRACKING	L	106 LF
DEPRESSION	L	30 SF
WEATHERING/RAVELING	M	16 SF
PATCHING	L	2 SF

Sample # 5 **Area:** 5000 SF

Distress Description	Severity	Quantity
LONGITUDINAL/TRANSVERSE CRACKING	L	230 LF
WEATHERING/RAVELING	L	500 SF
LONGITUDINAL/TRANSVERSE CRACKING	M	82 LF
WEATHERING/RAVELING	M	36 SF
DEPRESSION	L	13 SF
BLEEDING	N	2 SF

Sample # 6 **Area:** 5000 SF

Distress Description	Severity	Quantity
LONGITUDINAL/TRANSVERSE CRACKING	L	166 LF
WEATHERING/RAVELING	L	500 SF
SWELLING	L	24 SF
WEATHERING/RAVELING	M	23 SF
LONGITUDINAL/TRANSVERSE CRACKING	M	7 LF
OIL SPILLAGE	N	18 SF
PATCHING	L	12 SF
DEPRESSION	L	6 SF

Extrapolated Distress Quantities*

Distress Description	Severity	Quantity	Density	Deduct
LONGITUDINAL/TRANSVERSE CRACKING	M	568 LF	1.42 %	13.23
WEATHERING/RAVELING	L	4000 SF	10.00 %	9.83
LONGITUDINAL/TRANSVERSE CRACKING	L	1142 LF	2.86 %	9.67
WEATHERING/RAVELING	M	194 SF	0.49 %	6.08
DEPRESSION	L	170 SF	0.42 %	2.69
OIL SPILLAGE	N	36 SF	0.09 %	2.00
PATCHING	L	28 SF	0.07 %	2.00
SWELLING	L	48 SF	0.12 %	1.20
BLEEDING	N	4 SF	0.01 %	0.00

* Multiple deduct values are scaled down from their algebraic sum to keep the model consistent with experimental data.

Percent of Deduct Values Based on Distress Mechanism

0.0 **% Load** 87.0 **% Climate/Durability** 13.0 **% Other**

BAKER AIRPORT

Branch: 56A **APRON** **A-6**

Length: 102 LF **Width:** 147 LF **Area:** 14,994 SF **Last Const. :** 1997 **Family:** 9PCAA

From: NW Apron corner **To:** A-2 **Surface:** PCC

Inspections

Samples Surveyed: 3 **Total Samples:** 4 **Last Inspection Date:** 7/16/2009 **PCI: 56**

Sample # 1 **Area:** 25 Slabs

Distress Description	Severity	Quantity
JOINT SEAL DAMAGE	L	25 Slabs
JOINT SEAL DAMAGE	M	25 Slabs
JOINT SPALLING	M	6 Slabs
JOINT SPALLING	L	4 Slabs
FAULTING	L	4 Slabs
CORNER BREAK	L	1 Slabs
SMALL PATCH	L	1 Slabs
SCALING/CRAZING	L	1 Slabs
CORNER BREAK	M	1 Slabs

Sample # 2 **Area:** 21 Slabs

Distress Description	Severity	Quantity
FAULTING	L	6 Slabs
SMALL PATCH	L	4 Slabs
SCALING/CRAZING	L	3 Slabs
POPOUTS	N	3 Slabs
JOINT SPALLING	M	2 Slabs
JOINT SPALLING	L	1 Slabs
CORNER SPALLING	L	1 Slabs
FAULTING	M	1 Slabs

Sample # 3 **Area:** 20 Slabs

Distress Description	Severity	Quantity
JOINT SEAL DAMAGE	L	20 Slabs
FAULTING	L	5 Slabs
JOINT SPALLING	L	4 Slabs
SMALL PATCH	L	2 Slabs
POPOUTS	N	2 Slabs
LINEAR CRACKING	L	1 Slabs
SCALING/CRAZING	L	1 Slabs
JOINT SPALLING	M	1 Slabs

Extrapolated Distress Quantities*

Distress Description	Severity	Quantity	Density	Deduct
FAULTING	L	15 Slabs	22.73 %	16.31
JOINT SPALLING	M	9 Slabs	13.64 %	10.09
JOINT SEAL DAMAGE	M	25 Slabs	37.88 %	7.00
POPOUTS	N	5 Slabs	7.58 %	5.43
JOINT SPALLING	L	9 Slabs	13.64 %	4.44
FAULTING	M	1 Slabs	1.52 %	3.39
SCALING/CRAZING	L	5 Slabs	7.58 %	3.12
CORNER BREAK	M	1 Slabs	1.52 %	2.05
JOINT SEAL DAMAGE	L	46 Slabs	68.18 %	2.00
LINEAR CRACKING	L	1 Slabs	1.52 %	1.67
CORNER BREAK	L	1 Slabs	1.52 %	1.58
SMALL PATCH	L	7 Slabs	10.61 %	1.19
CORNER SPALLING	L	1 Slabs	1.52 %	0.67

* Multiple deduct values are scaled down from their algebraic sum to keep the model consistent with experimental data.

Percent of Deduct Values Based on Distress Mechanism

9.0 **% Load** 15.0 **% Climate/Durability** 76.0 **% Other**

BAKER AIRPORT

Branch: 56A **APRON** **A-7**

Length: 120 LF **Width:** 86 LF **Area:** 12,885 SF **Last Const. :** 2001 **Family:** 9ACAM
From: A-6 **To:** TIEDOWNS **Surface:** AC

Inspections

Samples Surveyed: 3 **Total Samples:** 5 **Last Inspection Date:** 7/16/2009 **PCI: 79**

Sample # 1 **Area:** 2580 SF

Distress Description	Severity	Quantity
WEATHERING/RAVELING	L	260 SF
LONGITUDINAL/TRANSVERSE CRACKING	L	9 LF
WEATHERING/RAVELING	M	6 SF
DEPRESSION	L	3 SF
WEATHERING/RAVELING	H	2 SF

Sample # 4 **Area:** 2580 SF

Distress Description	Severity	Quantity
WEATHERING/RAVELING	L	260 SF
DEPRESSION	L	3 SF
PATCHING	M	1 SF

Sample # 5 **Area:** 2565 SF

Distress Description	Severity	Quantity
WEATHERING/RAVELING	L	257 SF
WEATHERING/RAVELING	M	40 SF
DEPRESSION	L	30 SF
LONGITUDINAL/TRANSVERSE CRACKING	L	8 LF
BLEEDING	N	1 SF

Extrapolated Distress Quantities*

Distress Description	Severity	Quantity	Density	Deduct
WEATHERING/RAVELING	L	1296 SF	10.06 %	9.85
WEATHERING/RAVELING	M	77 SF	0.60 %	6.53
PATCHING	M	2 SF	0.01 %	6.20
WEATHERING/RAVELING	H	3 SF	0.03 %	6.00
LONGITUDINAL/TRANSVERSE CRACKING	L	28 LF	0.22 %	3.23
DEPRESSION	L	60 SF	0.47 %	3.02
BLEEDING	N	2 SF	0.01 %	0.00

* Multiple deduct values are scaled down from their algebraic sum to keep the model consistent with experimental data.

Percent of Deduct Values Based on Distress Mechanism

0.0 **% Load** 91.0 **% Climate/Durability** 9.0 **% Other**

BAKER AIRPORT

Branch: 56R **RUNWAY** **R-1**

Length: 4,900 LF **Width:** 75 LF **Area:** 367,500 SF **Last Const. :** 2001 **Family:** 9ACRMU

From: STA 0+00 RWY 12/30 **To:** STA 49+00 RWY 12/30 **Surface:** AC

Inspections

Samples Surveyed: 7 **Total Samples:** 75 **Last Inspection Date:** 7/16/2009 **PCI: 67**

Sample # 4 **Area:** 4875 SF

Distress Description	Severity	Quantity
LONGITUDINAL/TRANSVERSE CRACKING	L	547 LF
WEATHERING/RAVELING	L	392 SF
LONGITUDINAL/TRANSVERSE CRACKING	M	18 LF
WEATHERING/RAVELING	M	49 SF
LONGITUDINAL/TRANSVERSE CRACKING	H	3 LF

Sample # 15 **Area:** 4875 SF

Distress Description	Severity	Quantity
LONGITUDINAL/TRANSVERSE CRACKING	L	182 LF
WEATHERING/RAVELING	L	392 SF
LONGITUDINAL/TRANSVERSE CRACKING	M	46 LF
WEATHERING/RAVELING	M	25 SF
LONGITUDINAL/TRANSVERSE CRACKING	H	1 LF

Sample # 26 **Area:** 4875 SF

Distress Description	Severity	Quantity
WEATHERING/RAVELING	L	392 SF
LONGITUDINAL/TRANSVERSE CRACKING	L	85 LF
WEATHERING/RAVELING	M	24 SF
PATCHING	L	1 SF

Sample # 37 **Area:** 4875 SF

Distress Description	Severity	Quantity
LONGITUDINAL/TRANSVERSE CRACKING	L	152 LF
WEATHERING/RAVELING	L	392 SF
LONGITUDINAL/TRANSVERSE CRACKING	M	34 LF
WEATHERING/RAVELING	M	12 SF
LONGITUDINAL/TRANSVERSE CRACKING	H	2 LF

Sample # 48 **Area:** 4875 SF

Distress Description	Severity	Quantity
LONGITUDINAL/TRANSVERSE CRACKING	L	187 LF
WEATHERING/RAVELING	L	392 SF
LONGITUDINAL/TRANSVERSE CRACKING	M	62 LF
WEATHERING/RAVELING	M	12 SF
LONGITUDINAL/TRANSVERSE CRACKING	H	2 LF

Sample # 59 **Area:** 4875 SF

Distress Description	Severity	Quantity
LONGITUDINAL/TRANSVERSE CRACKING	L	127 LF
WEATHERING/RAVELING	L	392 SF
LONGITUDINAL/TRANSVERSE CRACKING	M	55 LF
WEATHERING/RAVELING	M	12 SF
LONGITUDINAL/TRANSVERSE CRACKING	H	3 LF
WEATHERING/RAVELING	H	1 SF

Sample # 70 **Area:** 4875 SF

Distress Description	Severity	Quantity
WEATHERING/RAVELING	L	392 SF
LONGITUDINAL/TRANSVERSE CRACKING	L	80 LF
LONGITUDINAL/TRANSVERSE CRACKING	M	57 LF
LONGITUDINAL/TRANSVERSE CRACKING	H	13 LF
WEATHERING/RAVELING	M	24 SF

Extrapolated Distress Quantities*

Distress Description	Severity	Quantity	Density	Deduct
LONGITUDINAL/TRANSVERSE CRACKING	L	14650 LF	3.99 %	12.49
LONGITUDINAL/TRANSVERSE CRACKING	M	2930 LF	0.80 %	10.17
WEATHERING/RAVELING	L	29551 SF	8.04 %	8.79
LONGITUDINAL/TRANSVERSE CRACKING	H	259 LF	0.07 %	7.50
WEATHERING/RAVELING	H	11 SF	0.00 %	6.00
WEATHERING/RAVELING	M	1702 SF	0.46 %	5.99
PATCHING	L	11 SF	0.00 %	2.00

* Multiple deduct values are scaled down from their algebraic sum to keep the model consistent with experimental data.

BAKER AIRPORT

Branch: 56R **RUNWAY** **R-1**

Percent of Deduct Values Based on Distress Mechanism

0.0 **% Load**	100.0 **% Climate/Durability**	0.0 **% Other**

BAKER AIRPORT

Branch: 56T **TAXIWAY** **T-1**

Length: 675 LF **Width:** 50 LF **Area:** 33,750 SF **Last Const. :** 2001 **Family:** 9ACRMU
From: APRON A-1 **To:** T-2 and T-3 **Surface:** AAC

Inspections

Samples Surveyed: 4 **Total Samples:** 7 **Last Inspection Date:** 7/16/2009 **PCI: 69**

Sample # 1 **Area:** 5000 SF

Distress Description	Severity	Quantity
LONGITUDINAL/TRANSVERSE CRACKING	L	314 LF
WEATHERING/RAVELING	L	400 SF
LONGITUDINAL/TRANSVERSE CRACKING	M	20 LF
WEATHERING/RAVELING	M	10 SF
WEATHERING/RAVELING	H	2 SF

Sample # 2 **Area:** 5000 SF

Distress Description	Severity	Quantity
LONGITUDINAL/TRANSVERSE CRACKING	L	151 LF
WEATHERING/RAVELING	L	400 SF
LONGITUDINAL/TRANSVERSE CRACKING	M	23 LF
WEATHERING/RAVELING	M	10 SF
WEATHERING/RAVELING	H	1 SF

Sample # 5 **Area:** 5000 SF

Distress Description	Severity	Quantity
WEATHERING/RAVELING	L	400 SF
LONGITUDINAL/TRANSVERSE CRACKING	L	118 LF
LONGITUDINAL/TRANSVERSE CRACKING	M	12 LF
WEATHERING/RAVELING	M	10 SF
WEATHERING/RAVELING	H	4 SF

Sample # 6 **Area:** 5000 SF

Distress Description	Severity	Quantity
WEATHERING/RAVELING	L	400 SF
LONGITUDINAL/TRANSVERSE CRACKING	L	121 LF
WEATHERING/RAVELING	M	60 SF
LONGITUDINAL/TRANSVERSE CRACKING	M	18 LF
WEATHERING/RAVELING	H	1 SF
PATCHING	L	1 SF

Extrapolated Distress Quantities*

Distress Description	Severity	Quantity	Density	Deduct
LONGITUDINAL/TRANSVERSE CRACKING	L	1188 LF	3.52 %	11.36
WEATHERING/RAVELING	L	2700 SF	8.00 %	8.76
LONGITUDINAL/TRANSVERSE CRACKING	M	123 LF	0.37 %	7.16
WEATHERING/RAVELING	H	13 SF	0.04 %	6.00
WEATHERING/RAVELING	M	152 SF	0.45 %	5.93
PATCHING	L	2 SF	0.00 %	2.00

* Multiple deduct values are scaled down from their algebraic sum to keep the model consistent with experimental data.

Percent of Deduct Values Based on Distress Mechanism

0.0 **% Load** 100.0 **% Climate/Durability** 0.0 **% Other**

BAKER AIRPORT

Branch: 56T **TAXIWAY** **T-2**

Length: 3,920 LF **Width:** 35 LF **Area:** 137,200 SF **Last Const. :** 2001 **Family:** 9ACRMU
From: PARALLEL TO RWY 12/30 **To:** **Surface:** AAC

Inspections

Samples Surveyed: 5 **Total Samples:** 28 **Last Inspection Date:** 7/16/2009 **PCI: 73**

Sample # 3 **Area:** 4900 SF

Distress Description	Severity	Quantity
LONGITUDINAL/TRANSVERSE CRACKING	L	174 LF
WEATHERING/RAVELING	L	392 SF
LONGITUDINAL/TRANSVERSE CRACKING	H	4 LF
WEATHERING/RAVELING	M	12 SF

Sample # 9 **Area:** 4900 SF

Distress Description	Severity	Quantity
LONGITUDINAL/TRANSVERSE CRACKING	L	168 LF
WEATHERING/RAVELING	L	392 SF
LONGITUDINAL/TRANSVERSE CRACKING	M	5 LF
WEATHERING/RAVELING	M	12 SF

Sample # 15 **Area:** 4900 SF

Distress Description	Severity	Quantity
LONGITUDINAL/TRANSVERSE CRACKING	L	259 LF
WEATHERING/RAVELING	L	392 SF
LONGITUDINAL/TRANSVERSE CRACKING	M	4 LF
WEATHERING/RAVELING	M	12 SF

Sample # 21 **Area:** 4900 SF

Distress Description	Severity	Quantity
LONGITUDINAL/TRANSVERSE CRACKING	L	169 LF
WEATHERING/RAVELING	L	392 SF
LONGITUDINAL/TRANSVERSE CRACKING	M	33 LF
WEATHERING/RAVELING	M	25 SF

Sample # 27 **Area:** 4900 SF

Distress Description	Severity	Quantity
LONGITUDINAL/TRANSVERSE CRACKING	L	142 LF
WEATHERING/RAVELING	L	392 SF
LONGITUDINAL/TRANSVERSE CRACKING	M	17 LF
WEATHERING/RAVELING	M	49 SF
LONGITUDINAL/TRANSVERSE CRACKING	H	3 LF

Extrapolated Distress Quantities*

Distress Description	Severity	Quantity	Density	Deduct
LONGITUDINAL/TRANSVERSE CRACKING	L	5109 LF	3.72 %	11.86
WEATHERING/RAVELING	L	10976 SF	8.00 %	8.76
LONGITUDINAL/TRANSVERSE CRACKING	H	39 LF	0.03 %	7.50
WEATHERING/RAVELING	M	616 SF	0.45 %	5.93
LONGITUDINAL/TRANSVERSE CRACKING	M	330 LF	0.24 %	5.74

* Multiple deduct values are scaled down from their algebraic sum to keep the model consistent with experimental data.

Percent of Deduct Values Based on Distress Mechanism

0.0 **% Load** 100.0 **% Climate/Durability** 0.0 **% Other**

BAKER AIRPORT

Branch: 56T **TAXIWAY** **T-3**

Length: 1,532 LF **Width:** 35 LF **Area:** 53,620 SF **Last Const. :** 2001 **Family:** 9ACRMU
From: TAXIWAY T-2 **To:** RWY 12/30 **Surface:** AAC

Inspections

Samples Surveyed: 4 **Total Samples:** 13 **Last Inspection Date:** 7/16/2009 **PCI: 79**

Sample # 4 **Area:** 3220 SF

Distress Description	Severity	Quantity
LONGITUDINAL/TRANSVERSE CRACKING	L	136 LF
WEATHERING/RAVELING	L	256 SF
WEATHERING/RAVELING	M	37 SF
WEATHERING/RAVELING	H	4 SF

Sample # 6 **Area:** 3220 SF

Distress Description	Severity	Quantity
WEATHERING/RAVELING	L	256 SF
LONGITUDINAL/TRANSVERSE CRACKING	L	42 LF
WEATHERING/RAVELING	M	32 SF
WEATHERING/RAVELING	H	1 SF

Sample # 11 **Area:** 4900 SF

Distress Description	Severity	Quantity
WEATHERING/RAVELING	L	392 SF
LONGITUDINAL/TRANSVERSE CRACKING	L	92 LF
WEATHERING/RAVELING	M	25 SF

Sample # 12 **Area:** 4900 SF

Distress Description	Severity	Quantity
WEATHERING/RAVELING	L	392 SF
LONGITUDINAL/TRANSVERSE CRACKING	L	35 LF
WEATHERING/RAVELING	M	25 SF

Extrapolated Distress Quantities*

Distress Description	Severity	Quantity	Density	Deduct
WEATHERING/RAVELING	L	4279 SF	7.98 %	8.75
LONGITUDINAL/TRANSVERSE CRACKING	L	1007 LF	1.88 %	7.09
WEATHERING/RAVELING	M	393 SF	0.73 %	7.02
WEATHERING/RAVELING	H	17 SF	0.03 %	6.00

* Multiple deduct values are scaled down from their algebraic sum to keep the model consistent with experimental data.

Percent of Deduct Values Based on Distress Mechanism

0.0 **% Load** 100.0 **% Climate/Durability** 0.0 **% Other**

BAKER AIRPORT

Branch: 56T **TAXIWAY** **T-4**

Length: 0 LF **Width:** 0 LF **Area:** 45,415 SF **Last Const. :** 1997 **Family:** 9ACRMU
From: apron **To:** hangars **Surface:** AC

Inspections

Samples Surveyed: 4 **Total Samples:** 11 **Last Inspection Date:** 7/16/2009 **PCI: 75**

Sample # 2 **Area:** 5275 SF

Distress Description	Severity	Quantity
WEATHERING/RAVELING	L	254 SF
LONGITUDINAL/TRANSVERSE CRACKING	L	9 LF
WEATHERING/RAVELING	M	12 SF
WEATHERING/RAVELING	H	1 SF
PATCHING	L	1 SF

Sample # 5 **Area:** 4830 SF

Distress Description	Severity	Quantity
LONGITUDINAL/TRANSVERSE CRACKING	L	116 LF
WEATHERING/RAVELING	L	297 SF
WEATHERING/RAVELING	M	12 SF
LONGITUDINAL/TRANSVERSE CRACKING	M	2 LF
PATCHING	L	1 SF

Sample # 6 **Area:** 5940 SF

Distress Description	Severity	Quantity
LONGITUDINAL/TRANSVERSE CRACKING	L	171 LF
WEATHERING/RAVELING	L	242 SF
WEATHERING/RAVELING	M	12 SF
WEATHERING/RAVELING	H	8 SF
PATCHING	L	1 SF

Sample # 9 **Area:** 5200 SF

Distress Description	Severity	Quantity
WEATHERING/RAVELING	L	260 SF
LONGITUDINAL/TRANSVERSE CRACKING	L	62 LF
LONGITUDINAL/TRANSVERSE CRACKING	M	7 LF
WEATHERING/RAVELING	M	12 SF
LONGITUDINAL/TRANSVERSE CRACKING	H	1 LF
PATCHING	L	1 SF

Extrapolated Distress Quantities*

Distress Description	Severity	Quantity	Density	Deduct
LONGITUDINAL/TRANSVERSE CRACKING	H	2 LF	0.00 %	7.50
WEATHERING/RAVELING	L	2251 SF	4.96 %	6.77
LONGITUDINAL/TRANSVERSE CRACKING	L	765 LF	1.69 %	6.58
WEATHERING/RAVELING	H	19 SF	0.04 %	6.00
WEATHERING/RAVELING	M	103 SF	0.23 %	4.81
LONGITUDINAL/TRANSVERSE CRACKING	M	19 LF	0.04 %	4.00
PATCHING	L	9 SF	0.02 %	2.00

* Multiple deduct values are scaled down from their algebraic sum to keep the model consistent with experimental data.

Percent of Deduct Values Based on Distress Mechanism

0.0 **% Load** 100.0 **% Climate/Durability** 0.0 **% Other**

BAKER AIRPORT

FIRST YEAR LOCAL:2010 LOCAL REPAIR COST: $21,576

Section	Distress Description	Severity	Quantity	Work Description	Quantity	Cost	Policy
A-2A	L & T CR	H	5 LF	Crack Sealing - AC	5 LF	$7	PREV.
A-2A	OIL SPILLAGE	N	51 SF	Patching - AC Shallow	83 SF	$1,242	PREV.
A-2A	L & T CR	M	888 LF	Crack Sealing - AC	888 LF	$1,331	PREV.
A-2A	DEPRESSION	H	28 SF	Patching - AC Deep	53 SF	$1,943	PREV.
A-2A	PATCHING	M	28 SF	Patching - AC Deep	53 SF	$1,943	PREV.
A-3A	L & T CR	M	67 LF	Crack Sealing - AC	67 LF	$99	PREV.
A-3A	OIL SPILLAGE	N	3 SF	Patching - AC Shallow	14 SF	$206	PREV.
A-5	L & T CR	M	569 LF	Crack Sealing - AC	569 LF	$852	PREV.
A-5	OIL SPILLAGE	N	36 SF	Patching - AC Shallow	65 SF	$962	PREV.
A-6	CORNER BREAK	M	1 Err	Patching - PCC Full Depth	33 SF	$2,196	PREV.
A-6	JOINT SPALL	M	9 Err	Patching - PCC Partial Dept	59 SF	$4,838	PREV.
A-7	PATCHING	M	2 SF	Patching - AC Deep	11 SF	$402	PREV.
R-1	L & T CR	H	259 LF	Crack Sealing - AC	259 LF	$388	PREV.
R-1	L & T CR	M	2930 LF	Crack Sealing - AC	2930 LF	$4,395	PREV.
T-1	L & T CR	M	124 LF	Crack Sealing - AC	124 LF	$185	PREV.
T-2	L & T CR	H	40 LF	Crack Sealing - AC	40 LF	$59	PREV.
T-2	L & T CR	M	331 LF	Crack Sealing - AC	331 LF	$496	PREV.
T-4	L & T CR	H	3 LF	Crack Sealing - AC	3 LF	$3	PREV.
T-4	L & T CR	M	20 LF	Crack Sealing - AC	20 LF	$29	PREV.

FIFTEEN YEAR PROJECTIONS: ESTIMATED AVERAGE ANNUAL COST: $202,067

PLAN YEAR: 2010 ESTIMATED COST: $94,240

SectionI	Maintenance	Local	Global	Major<Crit	Major>Crit	Total	PCI before	PCI after
A-2A	Basic Prev.	$6,465				$6,465	69	69
A-3A	Basic Prev.	$305				$305	68	68
A-5	Basic Prev.	$1,814				$1,814	65	65
A-6	Basic Prev.	$7,035				$7,035	55	55
A-7	Basic Prev.	$402				$402	78	78
R-1	Basic Prev.	$4,783				$4,783	66	66
T-1	Basic Prev.	$185				$185	68	68
T-2	Basic Prev.	$555				$555	72	72
T-4	Prev. & Thin AC	$32	$72,664			$72,696	74	85

PLAN YEAR: 2011 ESTIMATED COST: $985,002

SectionI	Maintenance	Local	Global	Major<Crit	Major>Crit	Total	PCI before	PCI after
A-2A	Basic Prev.	$5,600				$5,600	66	66
A-3A	Basic Prev.	$691				$691	66	66
A-5	Basic Prev.	$2,075				$2,075	62	62
A-6	Basic Prev.	$1,049				$1,049	54	54
A-7	Basic Prev.	$389				$389	74	74
R-1	Prev. & Thin AC	$18,484	$588,001			$606,486	63	76
T-1	Prev. & Thin AC	$1,609	$54,000			$55,609	65	78
T-2	Prev. & Thin AC	$5,798	$219,521			$225,319	69	81
T-3	Prev. & Thin AC	$1,475	$85,792			$87,267	76	87
T-4	Basic Prev.	$518				$518	83	83

PLAN YEAR: 2012 ESTIMATED COST: $27,206

SectionI	Maintenance	Local	Global	Major<Crit	Major>Crit	Total	PCI before	PCI after
A-2A	Basic Prev.	$6,039				$6,039	63	63
A-3A	Basic Prev.	$730				$730	64	64
A-5	Basic Prev.	$2,276				$2,276	59	59
A-6	Basic Prev.	$1,088				$1,088	54	54
A-7	Basic Prev.	$482				$482	72	72
R-1	Basic Prev.	$11,909				$11,909	74	74
T-1	Basic Prev.	$939				$939	75	75
T-2	Basic Prev.	$2,586				$2,586	79	79
T-3	Basic Prev.	$472				$472	85	85
T-4	Basic Prev.	$685				$685	81	81

BAKER AIRPORT

PLAN YEAR: 2013 ESTIMATED COST: $31,838

SectionI	Maintenance	Local	Global	Major<Crit	Major>Crit	Total	PCI before	PCI after
A-2A	Basic Prev.	$6,481				$6,481	60	60
A-3A	Basic Prev.	$766				$766	62	62
A-5	Basic Prev.	$2,596				$2,596	56	56
A-6	Basic Prev.	$1,122				$1,122	53	53
A-7	Basic Prev.	$554				$554	69	69
R-1	Basic Prev.	$14,224				$14,224	71	71
T-1	Basic Prev.	$1,145				$1,145	73	73
T-2	Basic Prev.	$3,373				$3,373	77	77
T-3	Basic Prev.	$672				$672	82	82
T-4	Basic Prev.	$906				$906	79	79

PLAN YEAR: 2014 ESTIMATED COST: $36,368

SectionI	Maintenance	Local	Global	Major<Crit	Major>Crit	Total	PCI before	PCI after
A-2A	Basic Prev.	$7,379				$7,379	57	57
A-3A	Basic Prev.	$800				$800	60	60
A-5	Basic Prev.	$2,924				$2,924	53	53
A-6	Basic Prev.	$1,153				$1,153	52	52
A-7	Basic Prev.	$601				$601	66	66
R-1	Basic Prev.	$15,924				$15,924	68	68
T-1	Basic Prev.	$1,359				$1,359	70	70
T-2	Basic Prev.	$4,192				$4,192	74	74
T-3	Basic Prev.	$868				$868	80	80
T-4	Basic Prev.	$1,168				$1,168	76	76

PLAN YEAR: 2015 ESTIMATED COST: $40,656

SectionI	Maintenance	Local	Global	Major<Crit	Major>Crit	Total	PCI before	PCI after
A-2A	Basic Prev.	$8,349				$8,349	55	55
A-3A	Basic Prev.	$869				$869	58	58
A-5	Basic Prev.	$3,266				$3,266	50	50
A-6	Basic Prev.	$1,180				$1,180	51	51
A-7	Basic Prev.	$648				$648	63	63
R-1	Basic Prev.	$17,208				$17,208	66	66
T-1	Basic Prev.	$1,491				$1,491	68	68
T-2	Basic Prev.	$5,042				$5,042	72	72
T-3	Basic Prev.	$1,162				$1,162	78	78
T-4	Basic Prev.	$1,441				$1,441	74	74

PLAN YEAR: 2016 ESTIMATED COST: $128,501

SectionI	Maintenance	Local	Global	Major<Crit	Major>Crit	Total	PCI before	PCI after
A-2A	Basic Prev.	$9,357				$9,357	52	52
A-3A	Basic Prev.	$938				$938	57	57
A-5	Reconstruct			$87,216		$87,216	47	100
A-6	Basic Prev.	$1,204				$1,204	51	51
A-7	Basic Prev.	$696				$696	60	60
R-1	Basic Prev.	$18,484				$18,484	63	63
T-1	Basic Prev.	$1,609				$1,609	65	65
T-2	Basic Prev.	$5,798				$5,798	69	69
T-3	Basic Prev.	$1,475				$1,475	76	76
T-4	Basic Prev.	$1,725				$1,725	71	71

PLAN YEAR: 2017 ESTIMATED COST: $289,444

SectionI	Maintenance	Local	Global	Major<Crit	Major>Crit	Total	PCI before	PCI after
A-2A	Reconstruct			$254,925		$254,925	48	100
A-3A	Basic Prev.	$1,009				$1,009	55	55
A-6	Basic Prev.	$1,225				$1,225	50	50
A-7	Basic Prev.	$792				$792	57	57
R-1	Basic Prev.	$19,737				$19,737	61	61
T-1	Basic Prev.	$1,726				$1,726	62	62
T-2	Basic Prev.	$6,278				$6,278	67	67
T-3	Basic Prev.	$1,802				$1,802	73	73
T-4	Basic Prev.	$1,950				$1,950	69	69

PLAN YEAR: 2018 ESTIMATED COST: $38,067

SectionI	Maintenance	Local	Global	Major<Crit	Major>Crit	Total	PCI before	PCI after
A-3A	Basic Prev.	$1,084				$1,084	53	53
A-6	Basic Prev.	$1,256				$1,256	50	50
A-7	Basic Prev.	$896				$896	55	55
R-1	Basic Prev.	$21,981				$21,981	58	58
T-1	Basic Prev.	$1,844				$1,844	60	60
T-2	Basic Prev.	$6,757				$6,757	64	64
T-3	Basic Prev.	$2,141				$2,141	71	71
T-4	Basic Prev.	$2,108				$2,108	66	66

BAKER AIRPORT

PLAN YEAR: 2019 ESTIMATED COST: $41,902

SectionI	Maintenance	Local	Global	Major<Crit	Major>Crit	Total	PCI before	PCI after
A-3A	Basic Prev.	$1,165				$1,165	51	51
A-5	Basic Prev.	$152				$152	88	88
A-6	Basic Prev.	$1,301				$1,301	49	49
A-7	Basic Prev.	$1,004				$1,004	52	52
R-1	Basic Prev.	$24,353				$24,353	56	56
T-1	Basic Prev.	$2,073				$2,073	57	57
T-2	Basic Prev.	$7,227				$7,227	61	61
T-3	Basic Prev.	$2,359				$2,359	68	68
T-4	Basic Prev.	$2,267				$2,267	63	63

PLAN YEAR: 2020 ESTIMATED COST: $174,860

SectionI	Maintenance	Local	Global	Major<Crit	Major>Crit	Total	PCI before	PCI after
A-2A	Basic Prev.	$454				$454	88	88
A-3A	Reconstruct			$30,931		$30,931	49	100
A-5	Basic Prev.	$388				$388	84	84
A-6	Basic Prev.	$1,340				$1,340	49	49
A-7	Reconstruct			$27,362		$27,362	48	100
R-1	Basic Prev.	$26,545				$26,545	54	54
T-1	Basic Prev.	$2,287				$2,287	55	55
T-2	Basic Prev.	$7,921				$7,921	59	59
T-3	Basic Prev.	$2,546				$2,546	65	65
T-4	Prev. & Thin AC	$2,422	$72,664			$75,086	61	74

PLAN YEAR: 2021 ESTIMATED COST: $1,002,782

SectionI	Maintenance	Local	Global	Major<Crit	Major>Crit	Total	PCI before	PCI after
A-2A	Basic Prev.	$1,165				$1,165	84	84
A-5	Prev. & Fog Seal	$611	$8,000			$8,611	81	88
A-6	Basic Prev.	$1,374				$1,374	49	49
R-1	Prev. & Thin AC	$28,543	$588,001			$616,544	52	63
T-1	Prev. & Thin AC	$2,484	$54,000			$56,484	53	65
T-2	Prev. & Thin AC	$8,832	$219,521			$228,352	56	69
T-3	Prev. & Thin AC	$2,732	$85,792			$88,525	63	76
T-4	Basic Prev.	$1,726				$1,726	71	71

PLAN YEAR: 2022 ESTIMATED COST: $59,131

SectionI	Maintenance	Local	Global	Major<Crit	Major>Crit	Total	PCI before	PCI after
A-2A	Prev. & Fog Seal	$1,831	$24,000			$25,831	81	88
A-3A	Basic Prev.	$30				$30	89	89
A-5	Basic Prev.	$388				$388	84	84
A-6	Basic Prev.	$1,400				$1,400	49	49
R-1	Basic Prev.	$19,731				$19,731	61	61
T-1	Basic Prev.	$1,726				$1,726	62	62
T-2	Basic Prev.	$6,275				$6,275	67	67
T-3	Basic Prev.	$1,801				$1,801	73	73
T-4	Basic Prev.	$1,950				$1,950	69	69

PLAN YEAR: 2023 ESTIMATED COST: $38,206

SectionI	Maintenance	Local	Global	Major<Crit	Major>Crit	Total	PCI before	PCI after
A-2A	Basic Prev.	$1,163				$1,163	84	84
A-3A	Basic Prev.	$143				$143	84	84
A-5	Basic Prev.	$610				$610	81	81
A-6	Basic Prev.	$1,422				$1,422	48	48
A-7	Basic Prev.	$49				$49	88	88
R-1	Basic Prev.	$21,970				$21,970	58	58
T-1	Basic Prev.	$1,843				$1,843	60	60
T-2	Basic Prev.	$6,757				$6,757	64	64
T-3	Basic Prev.	$2,141				$2,141	71	71
T-4	Basic Prev.	$2,108				$2,108	66	66

PLAN YEAR: 2024 ESTIMATED COST: $42,807

SectionI	Maintenance	Local	Global	Major<Crit	Major>Crit	Total	PCI before	PCI after
A-2A	Basic Prev.	$1,829				$1,829	81	81
A-3A	Basic Prev.	$244				$244	80	80
A-5	Basic Prev.	$902				$902	78	78
A-6	Basic Prev.	$1,439				$1,439	48	48
A-7	Basic Prev.	$125				$125	84	84
R-1	Basic Prev.	$24,343				$24,343	56	56
T-1	Basic Prev.	$2,073				$2,073	57	57
T-2	Basic Prev.	$7,226				$7,226	61	61
T-3	Basic Prev.	$2,358				$2,358	68	68
T-4	Basic Prev.	$2,267				$2,267	63	63

BAKER AIRPORT

7/15/2009

A-2A, overview

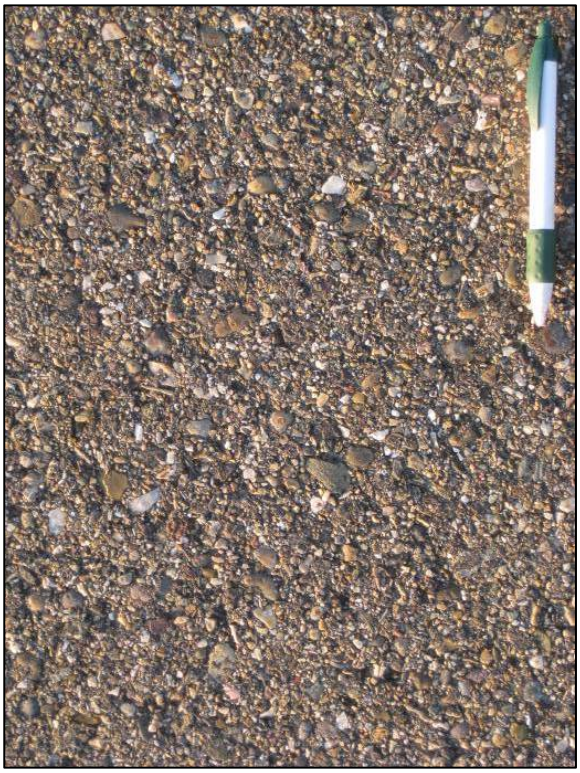

A-2A, surface detail

A-3A, surface detail with bleeding

A-2A, tiedown

BAKER AIRPORT

7/15/2009

A-5, overview

A-5, high severity crack

A-6, spalled edge

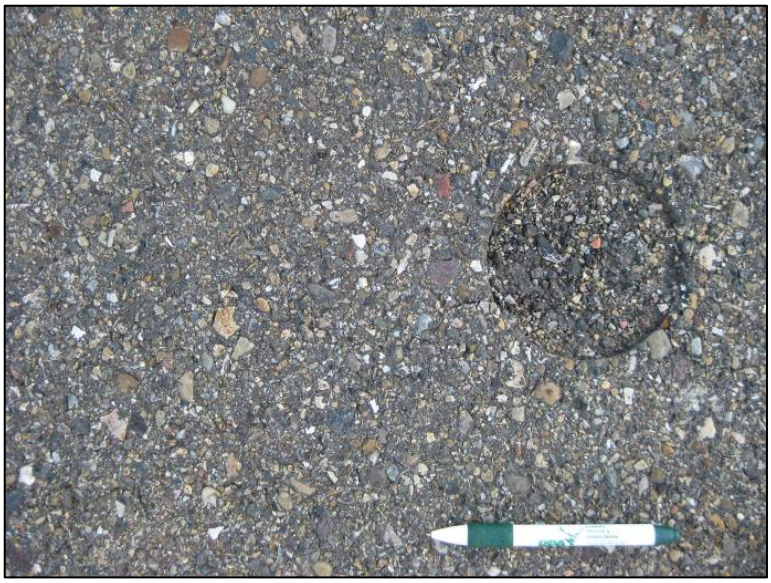

A-7, surface detail with patch

BAKER AIRPORT

7/15/2009

T-2, overview

T-2, surface detail with crack

T-3, surface detail with expanding aggregate

T-3, overview

BAKER AIRPORT

7/15/2009

T-4, overview

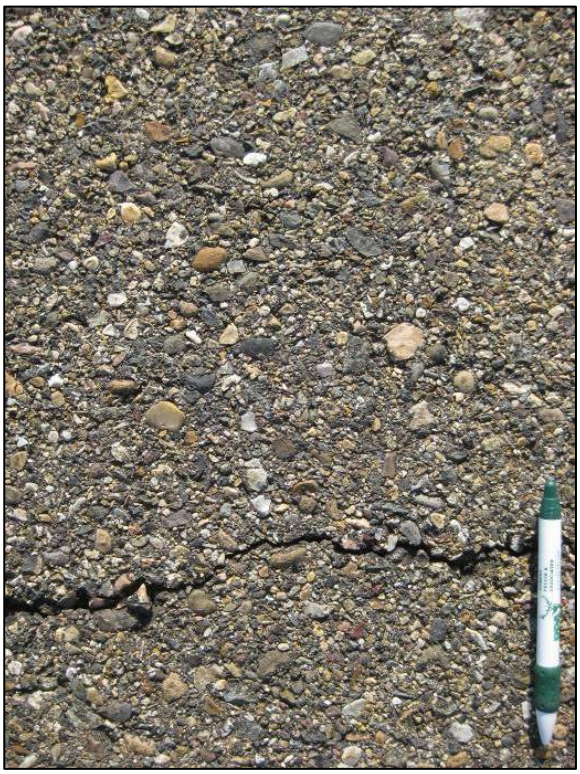

T-4, surface detail with crack and raveling

R-1, surface detail with crack and raveling

R-1, overview with raveling

BAKER

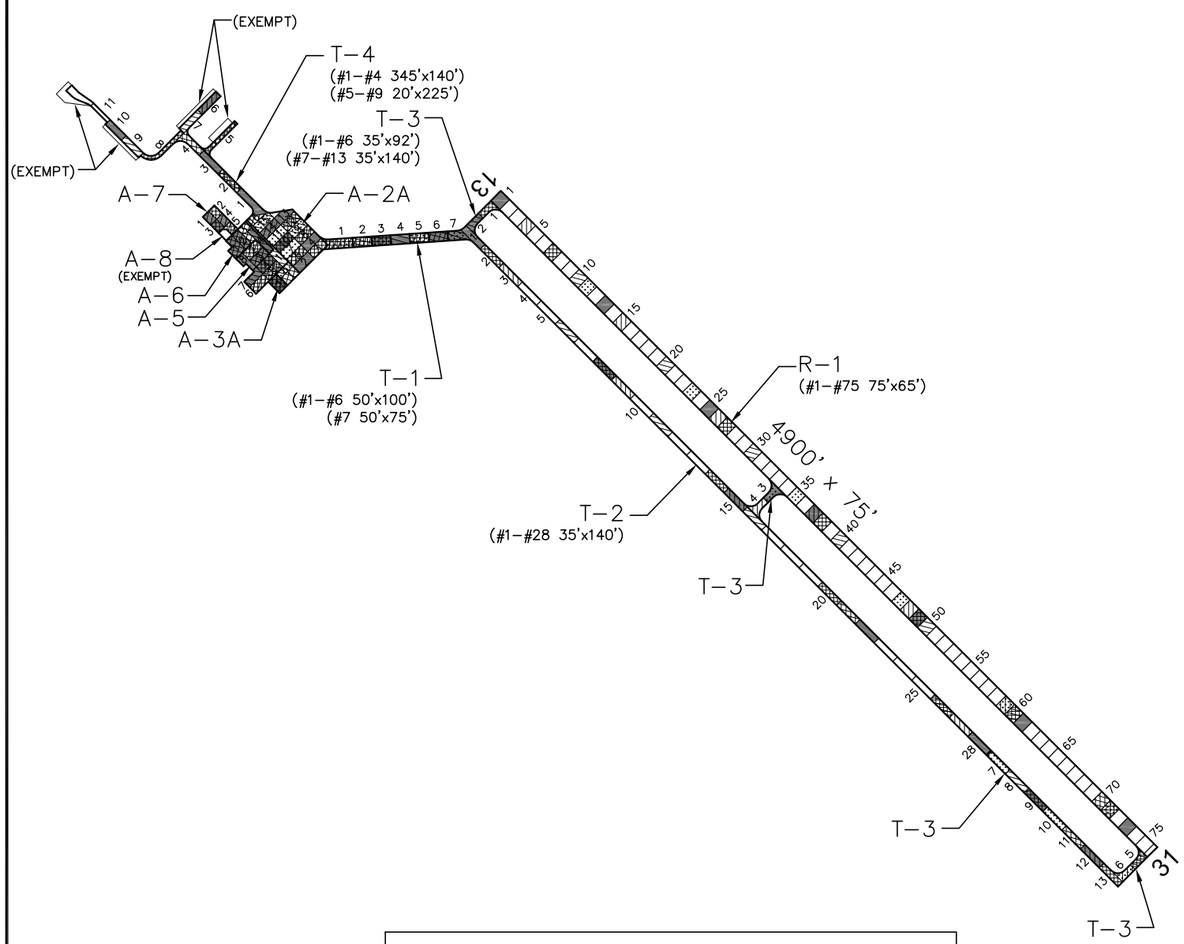

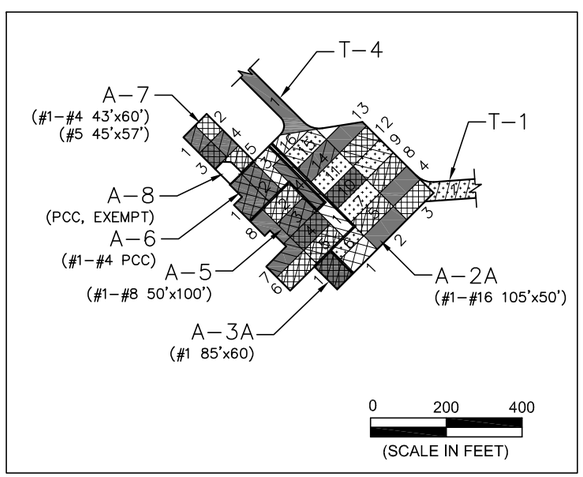

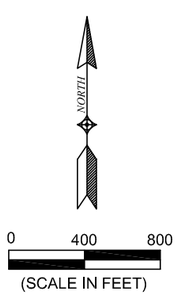

PAVEMENT STRENGTH SURVEY/PAVEMENT CONDITION SURVEY

BAKER

PAVE. IDENT.	SOIL CLASS	SUB GRADE CLASS	SUBBASE COURSE	BASE COURSE	SURFACE COURSE	OVERLAY	PAVEMENT STRENGTH MAX. GROSS LOAD (LBS) SINGLE	DUAL	DUAL TAN.	REMARKS
RUNWAYS										
R-1			12" COMPACTED	10" P-208+	5" P-401		17,500			3 4 6 7
			SUBGRADE+	12" CEMENT						
			35" SAND	TREATED SAND						
TAXIWAYS										
T-1				11" P-208	2" P-401	3" P-401	12,500			2 4 6 7
T-2				6" AGG.	P-609/2"RM	3" P-401	12,500			2 4 6 7
T-3				11" P-208	2"P-401/P-609	4.5" P-401	12,500			4 6 7
T-4			GEOGRID 18" P-153	GEOTEXTILE FABRIC 16" P-208	4" P-401					5 7
APRONS										
A-2A				11" P-208	2" P-401	5.25" P-401	12,500			2 5 7
A-3A			FILTER FABRIC	6" AGG	P-609/2" RM	P-609,5.25"P-401				2 5 7
A-5			GEOGRID 18" P-153	GEOTEXTILE FABRIC 16" P-208	4" P-401					5 7
A-6			GEOGRID 22" P-153	GEOTEXTILE FABRIC 8" P-208	8" P-501					5 7
A-7			GEOGRID 18" P-153	GEOTEXTILE FABRIC 16" P-208	4" P-401					6
A-8					_" P-501					7

REMARKS:

1. 1971, RM = ROAD MIX
2. AIP-02, 1988, CONSTRUCT PARTIAL PARALLEL TAXIWAY.
3. AIP-03, 1992, RECONSTRUCT PORTION OF RUNWAY.
4. AIP-04, 1993, RECONSTRUCT PORTION OF RUNWAY, REHABILITATE PARALLEL TAXIWAY, AND WIDEN CONNECTING TAXIWAY.
5. AIP-06, 1996, RECONSTRUCT PORTION OF APRON, OVERLAY APRON, AND CONSTRUCT TAXIWAY.
6. AIP-07, 2001, OVERLAY RUNWAY 13-31 AND TAXIWAYS, CONSTRUCT APRON (A-7).
7. AIP-008-2003, CRACK SEAL; CONSTRUCT CONCRETE APRON (A-8).

LEGEND

- 1997 SURVEY AREA
- 2000 SURVEY AREA
- 2003 SURVEY AREA
- 2006 SURVEY AREA
- 2009 SURVEY AREA

DATE OF PAVEMENT STRENGTH SURVEY:	SEPT. 8, 1988
EVALUATED BY:	J. STYBA
DATE OF MOST RECENT PAVEMENT CONDITION SURVEY:	JULY 16, 2009
EVALUATED BY:	B. BURKLAND

MONTANA AVIATION SYSTEM PLAN
2009 UPDATE - PAVEMENT CONDITION INDEXES

BAKER MUNICIPAL

PREPARED FOR: MONTANA AERONAUTICS DIVISION

BAKER MONTANA

DATE: NOV. 2009

PREPARED BY: RPA